BODY DIMENSION DRAWINGS

ENGINE COMPARTMENT

(Three-Dimensional Distance)

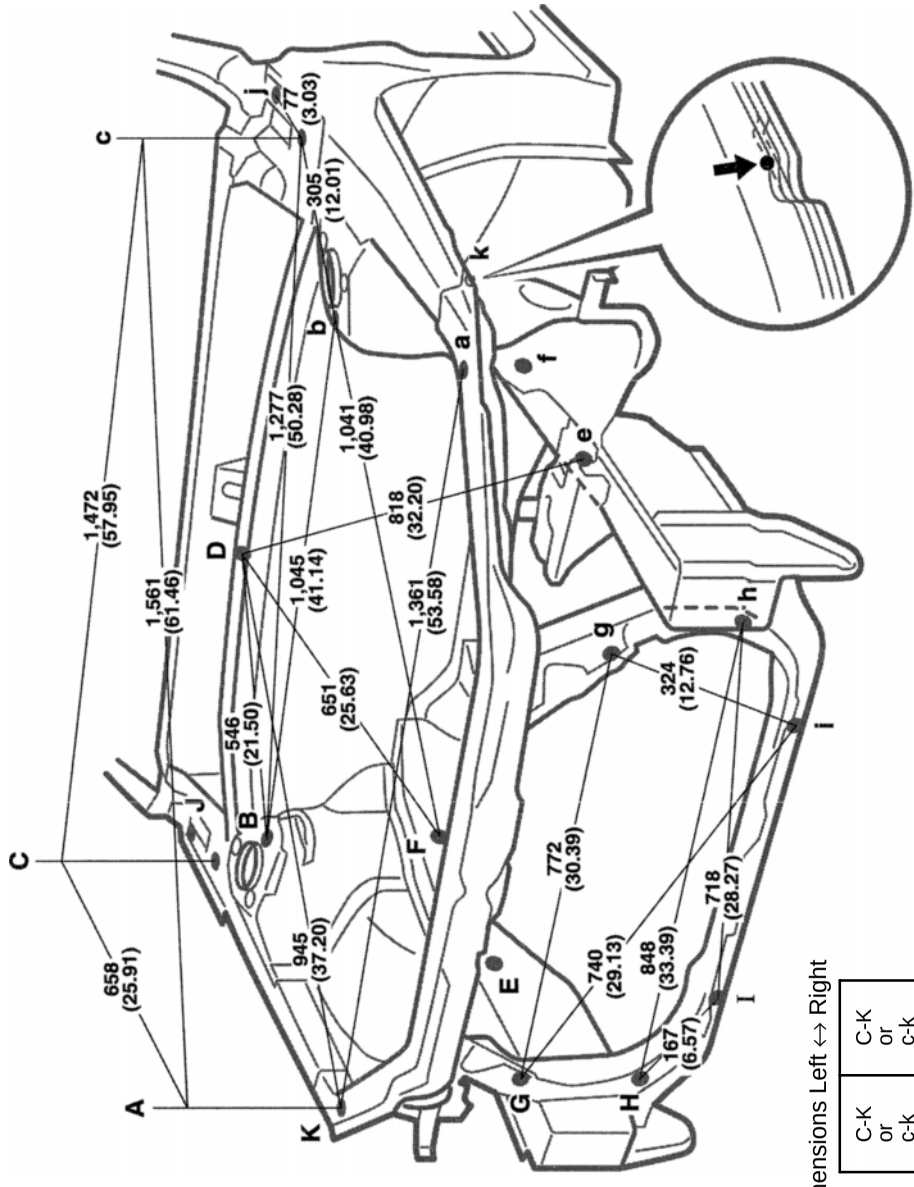

HINT: For symbols, capital letters indicate right side of vehicle, small letters indicate left side of vehicle (Seen from rear.)

mm (in.)

Vehicle Dimensions Left ↔ Right

K-k
1,524 (60.00)

C-K or c-k	C-K or c-k
666 (26.22)	1,639 (64.53)

Symbol	Name	Hole dia.	Symbol	Name	Hole dia.
A, a	Front fender installation nut-front	6 (0.24) nut	G, g	Front crossmember gusset standard hole	7 (0.28)
B, b	Front spring support hole-inner	11 (0.43)	H, h	Radiator side defector installation hole	7 (0.28)
C, c	Front fender installation nut-rear	6 (0.24) nut	I, i	Front crossmember standard hole	12 (0.47)
D, d	Cowl ventilator louver installation hole	7 (0.28)	J, j	Hood hinge installation nut-rear	8 (0.31) nut
E, e	Front side member standard hole	13 (0.51)	K, k	Front apron to cowl side member upper cut-out portion	—
F, f	Front side member working hole	15 (0.59)	—	—	—

BODY OPENING AREAS (Side View-Rear)

(Three-Dimensional Distance)

HINT: For symbols, capital letters indicate right side of vehicle, small letters indicate left side of vehicle (Seen from rear).

Vehicle Dimensions Left ↔ Right

N-n	O-o	P-p	Q-q	S-s	T-t
1,415 (55.71)	1,498 (58.98)	1,242 (48.90)	1,494 (58.82)	1,373 (54.06)	1,491 (58.70)

G-q or g-Q	I-p or i-P	I-r or i-R	N-s or n-S	N-t or n-T	O-t or o-T	P-q or p-Q	S-t or s-T
1,831 (72.09)	1,347 (53.03)	1,572 (61.89)	1,558 (61.34)	1,679 (66.10)	1,650 (64.96)	1,689 (66.50)	1,550 (59.06)

mm (in.)

Symbol	Name	Hole dia.	Symbol	Name	Hole dia.
G, g	Rocker panel assembly mark	—	Q, q	Rocker panel assembly mark	—
I, i	Roof side rail assembly mark	—	R, r	Roof side rail assembly mark	—
N, n	Center body pillar assembly mark	—	S, s	Quarter panel assembly mark	—
O, o	Center body pillar assembly mark	—	T, t	Quarter panel assembly mark	—
P, p	Roof side rail assembly mark	—	—	—	—

BODY OPENING AREAS (Rear View)

(Three-Dimensional Distance)

HINT: For symbols, capital letters indicate right side of vehicle, small letters indicate left side of vehicle (Seen from rear).

Vehicle Dimensions Left ↔ Right

C-c	E-e
1,339 (52.72)	1,541 (60.67)

C-F or C-f	C-F or c-f
618 (24.33)	1,160 (45.67)

mm (in.)

Symbol	Name	Hole dia.	Symbol	Name	Hole dia.
A, a	Roof panel / Quarter panel adjoining portion	—	E, e	Quarter panel standard hole	10 (0.39)
B, b	Upper back panel / Quarter panel adjoining portion	—	F, f	Rear floor finish plate installation hole	7 (0.28)
C, c	Quarter panel / Upper back panel adjoining portion	—	G, g	Rear spring support hole inner - rear	9.5 (0.374)
D, d	Luggage compartment opening trough / Quarter panel adjoining portion	—	H, h	Center body pillar assembly mark	—

BODY OPENING AREAS (Side View-Front)

(Three-Dimensional Distance)

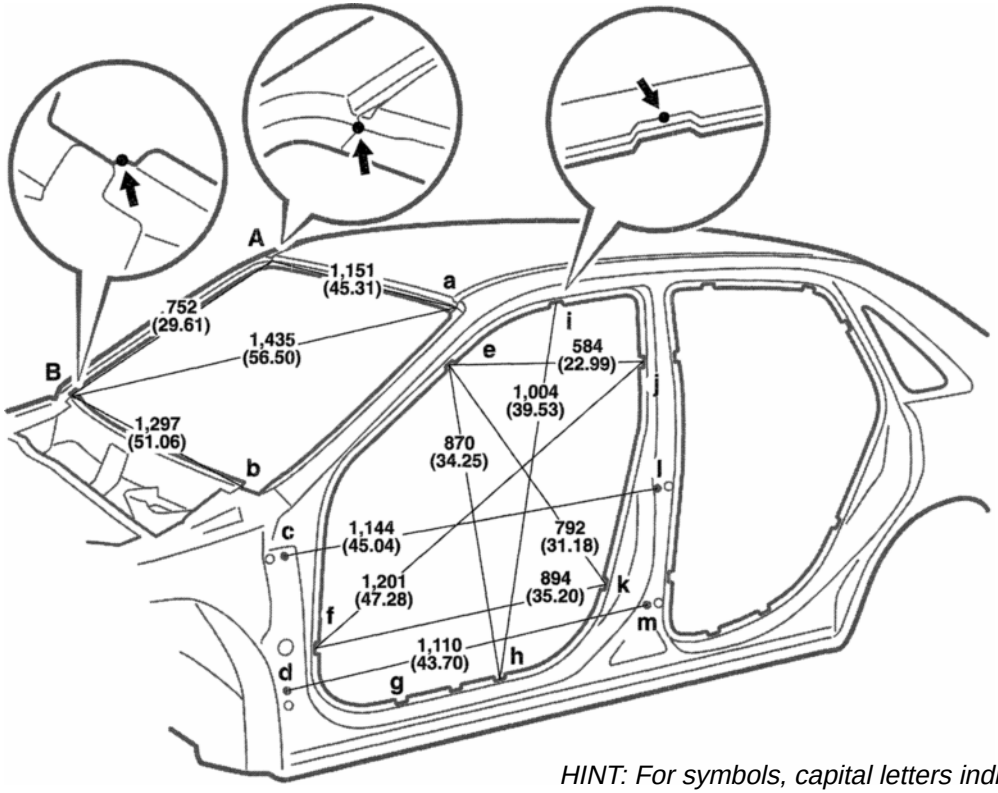

HINT: For symbols, capital letters indicate right side of vehicle, small letters indicate left side of vehicle (Seen from rear).

Vehicle Dimensions Left ↔ Right

E-e	F-f	G-g	H-h	I-i	J-j	K-k
1,326 (52.20)	1,491 (58.70)	1,491 (58.70)	1,491 (58.70)	1,242 (48.90)	1,402 (55.20)	1,498 (58.98)

E-f or e-F	E-h or e-H	E-j or e-J	F-j or f-J	F-k or f-K	H-i or h-I	J-k or j-K
1,623 (63.90)	1,654 (65.12)	1,483 (58.39)	1,880 (74.02)	1,742 (68.58)	1,691 (66.57)	1,574 (61.97)

mm (in.)

Symbol	Name	Hole dia.	Symbol	Name	Hole dia.
A, a	Roof panel / Front body pillar adjoining portion	—	H, h	Rocker panel assembly mark	—
B, b	Cowl panel / Front body pillar adjoining portion	—	I, i	Roof side rail assembly mark	—
C, c	Front door hinge installation nut-rear	8 (0.31) nut	J, j	Center body pillar assembly mark	—
D, d	Front door hinge installation nut-upper	8 (0.31) nut	K, k	Center body pillar assembly mark	—
E, e	Front body pillar assembly mark	—	L, l	Rear door hinge installation hole-front	15 (0.59)
F, f	Front body pillar assembly mark	—	M, m	Rear door hinge installation hole-front	15 (0.59)
G, g	Rocker panel assembly mark	—	—	—	—

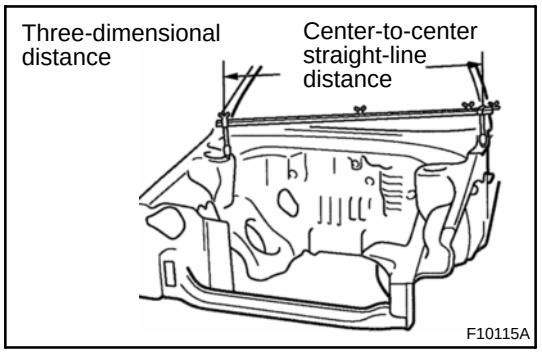

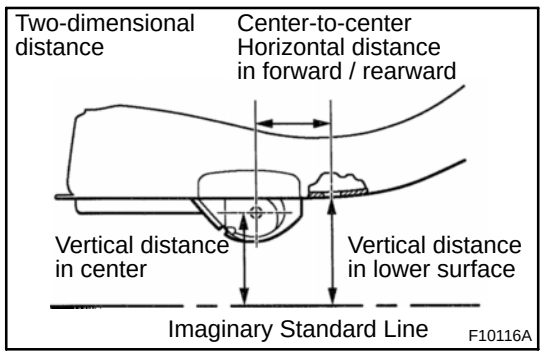

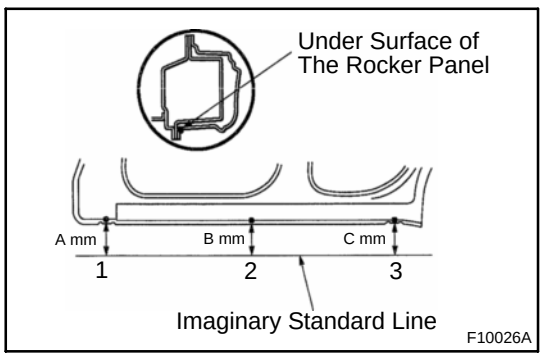

GENERAL INFORMATION

1. BASIC DIMENSIONS

(a) There are two typed of dimensions in the diagram.

(1) (Three-dimensional distance)

- Straight-line distance between the centers of two measuring points.

(2) (Two-dimensional distance)

- Horizontal distance in forward/ rearward between the centers of two measuring points.
- The height from an imaginary standard line.

(b) Incases in which only one dimension is given, left and right are symmetrical.

(c) The dimensions in the following drawing indicate actual distance. Therefore, please use the dimensions as a reference.

(d) The line that connects the places listed below is the imaginary standard line when measuring the height. (The dimensions are printed in the text.)

SYMBOL	Name
1	The place that was lowered A mm from the under surface of the rocker panel centered on the front jack up point.
2	The place that was lowered B mm from the under surface of the rocker panel centered between 1 and 3.
3	The place that was lowered C mm from the under surface of the rocker panel centered on the rear jack up point.

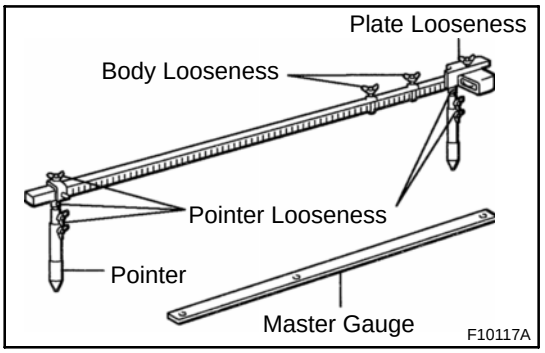

2. MEASURING

(a) Basically, all measurements are to be done with a tracking gauge. For portions where it is not possible to use a tracking gauge, a tape measure should be used.

(b) Use only a tracking gauge that has no looseness in the body, measuring plate, or pointers.

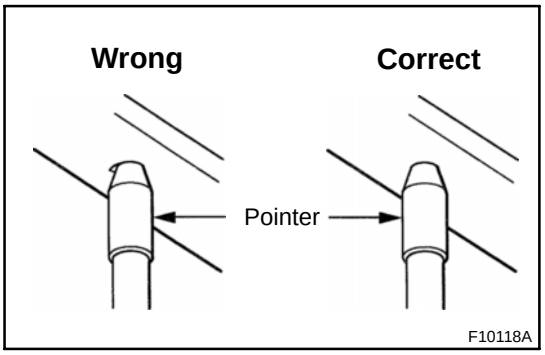

HINT:

1. *The height of the left and right points must be equal.*
2. *Always calibrate the tracking gauge before measuring or after adjusting the pointer height.*
3. *Take care not to drop the tracking gauge or otherwise shock it.*
4. *Confirm that the pointers are securely in the holes.*

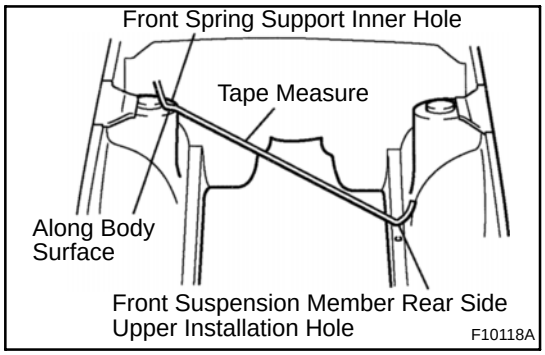

(c) When using a tape measure, avoid twists and bends in the tape.

(d) when tracking a diagonal measurement from the front spring support inner hole to the suspension member upper rear installation hole, measure along the front spring support panel surface.

(Three-Dimensional Distance)

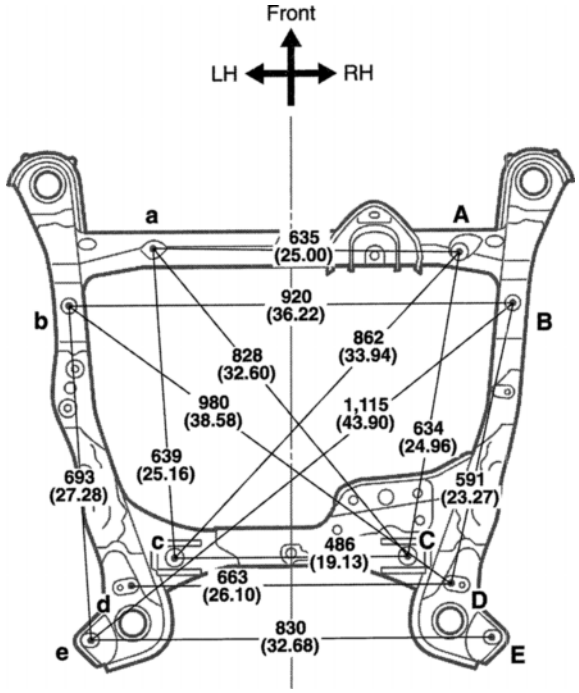

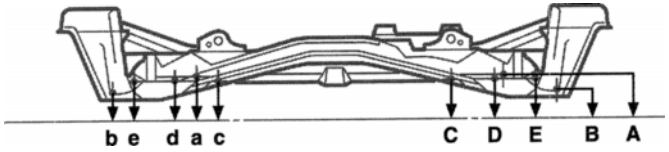

(Two-Dimensional Distance)

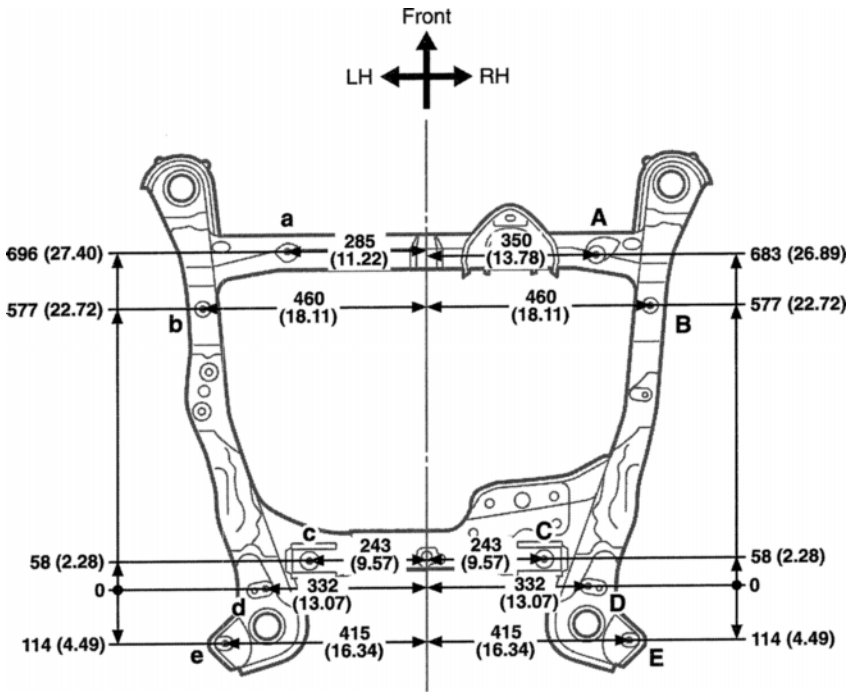

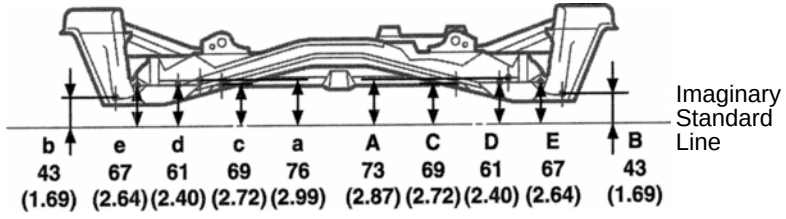

mm (in.)

Symbol	Name	Hole dia.	Symbol	Name	Hole dia.
A, a	Front frame standard hole	13 (0.51)	D, d	Front frame standard hole	13 (0.51)
B, b	Front frame standard hole	13 (0.51)	E, e	Lower control link installation hole-lower	15 (0.59)
C, c	Front frame standard hole	13 (0.51)	—	—	—

(Three-Dimensional Distance)

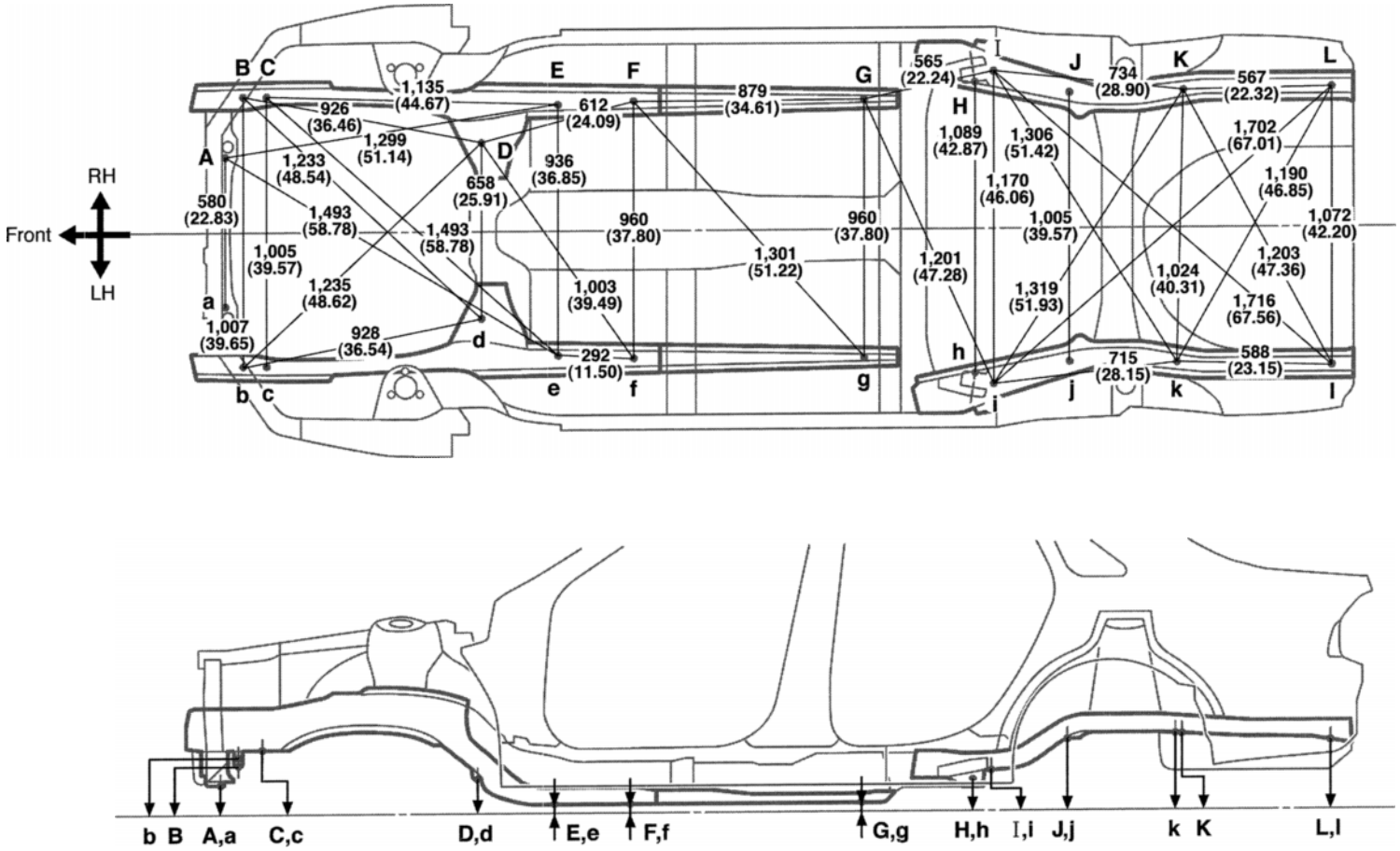

mm (in.)

Symbol	Name	Hole dia.	Symbol	Name	Hole dia.
A, a	Front crossmember standard hole	10 (0.39)	G, g	Front floor under reinforcement standard hole	15 (0.59)
B, b	Front frame installation nut	14 (0.55) nut	H, h	Strut bar installation hole-inner	12 (0.47)
C, c	Front side member standard hole	18 (0.71)	I, i	Rear floor side member standard hole	18 (0.71)
D, d	Front frame installation nut	14 (0.55) nut	J, j	Rear suspension member installation nut	12 (0.47) nut
E, e	Front side member standard hole	18 (0.71)	K, k	Rear floor side member standard hole	18 (0.71)
F, f	Front side member working hole	15 (0.59)	L, l	Rear floor side member standard hole	18 (0.71)

UNDER BODY (Cont'd)

(Two-Dimensional Distance)

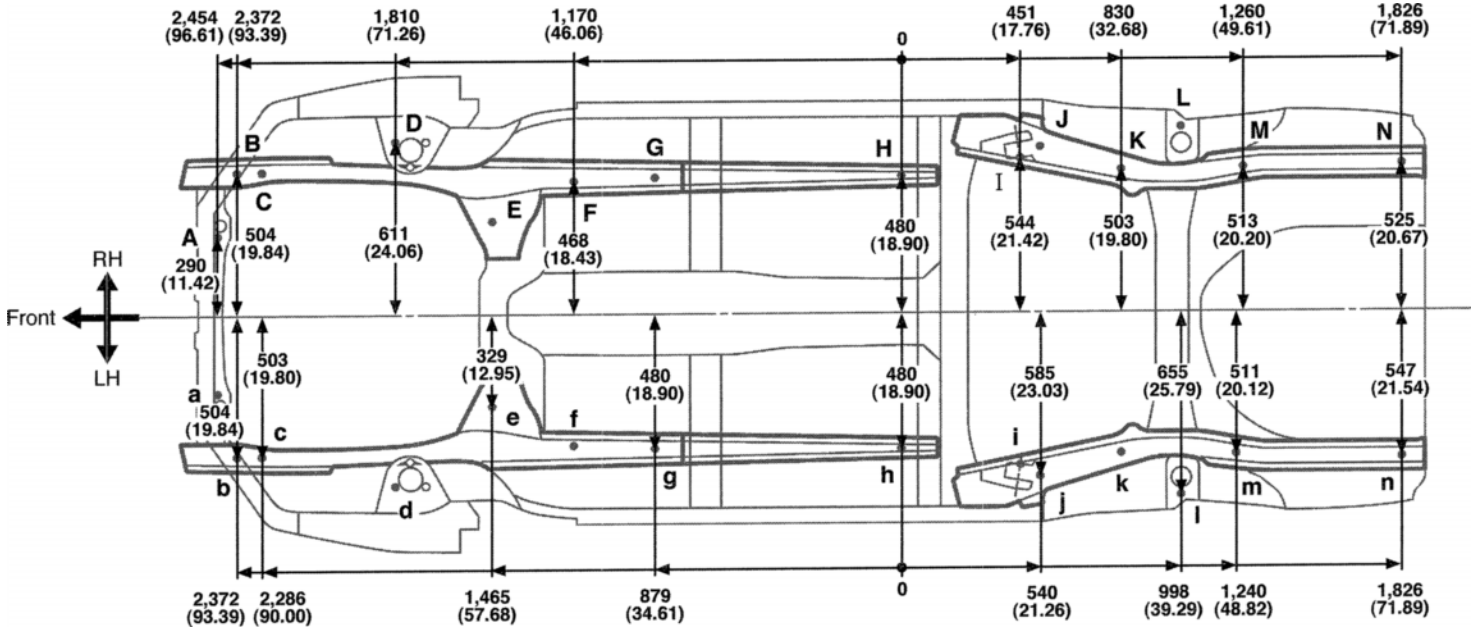

Wheel base	2,720 (107.09)

1	2	3
100 (3.94)	100 (3.94)	101 (3.98)

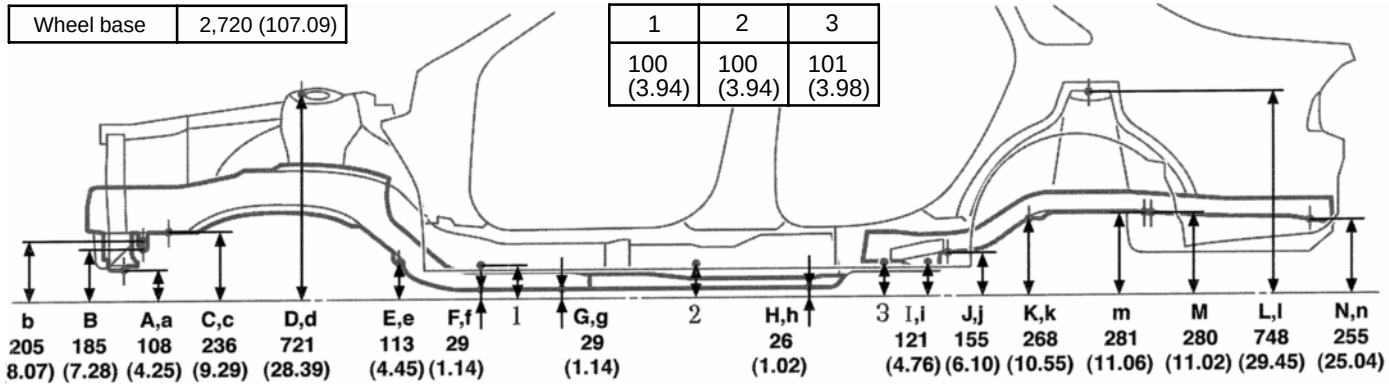

mm (in.)

Symbol	Name	Hole dia.	Symbol	Name	Hole dia.
A, a	Front crossmember standard hole	10 (0.39)	H, h	Front floor under reinforcement standard hole	15 (0.59)
B, b	Front frame installation nut	14 (0.55) nut	I, i	Strut bar installation hole-inner	12 (0.47)
C, c	Front side member standard hole	18 (0.71)	J, j	Rear floor side member standard hole	18 (0.71)
D, d	Front spring support hole outer-front	11 (0.43)	K, k	Rear suspension member installation nut	12 (0.47) nut
E, e	Front frame installation nut	14 (0.55) nut	L, l	Rear spring support hole-outer	9.5 (0.374)
F, f	Front side member standard hole	18 (0.71)	M, m	Rear floor side member standard hole	18 (0.71)
G, g	Front side member working hole	15 (0.59)	N, n	Rear floor side member standard hole	18 (0.71)

BODY LOWER BACK PANEL (ASSY)

REPLACEMENT

1. REMOVE BODY LOWER BACK PANEL

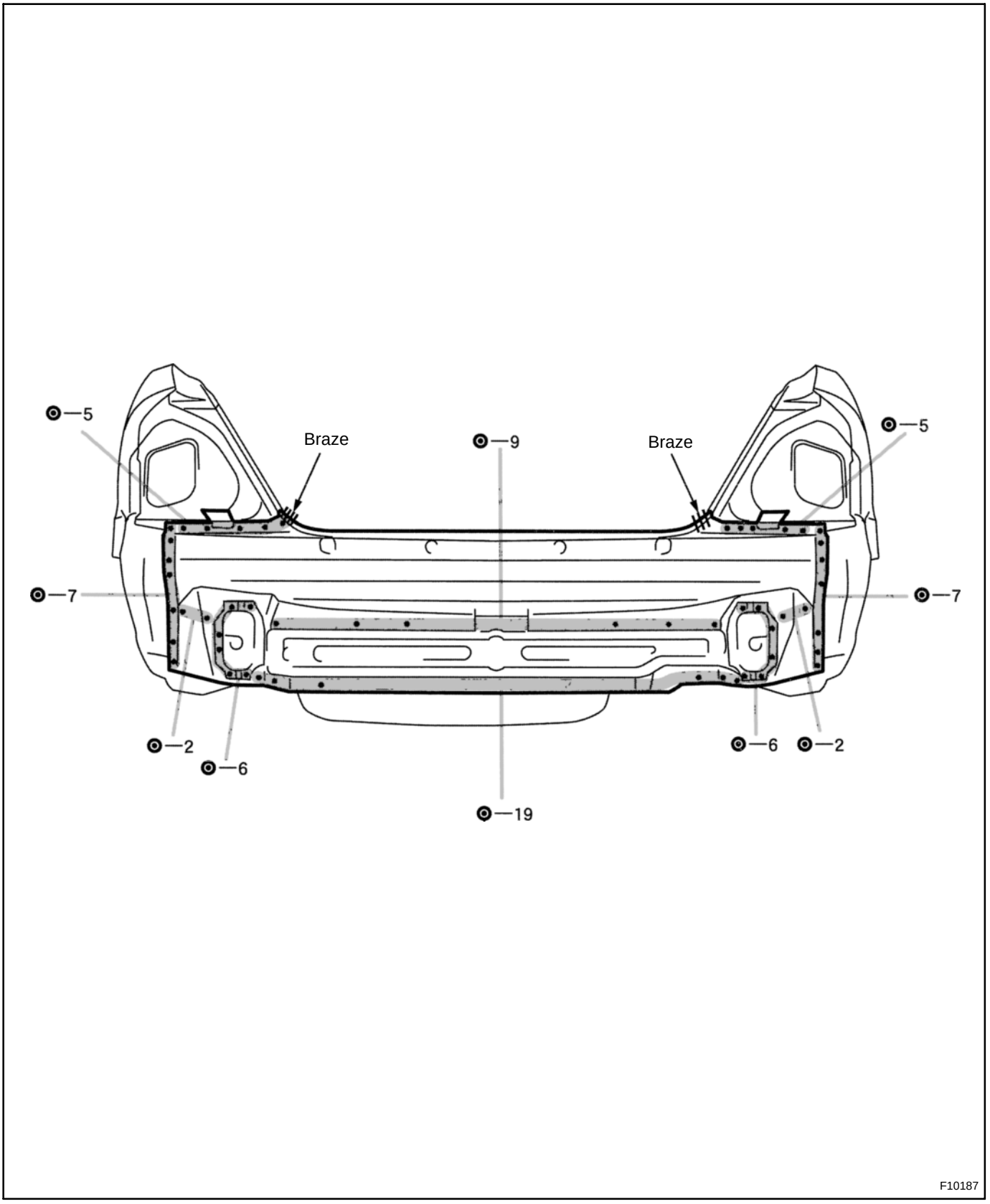

2. INSTALL BODY LOWER BACK PANEL

HINT:
Inspect the fitting of the luggage compartment door and rear combination light, etc., before welding, since this attacts the appearance of the finish.

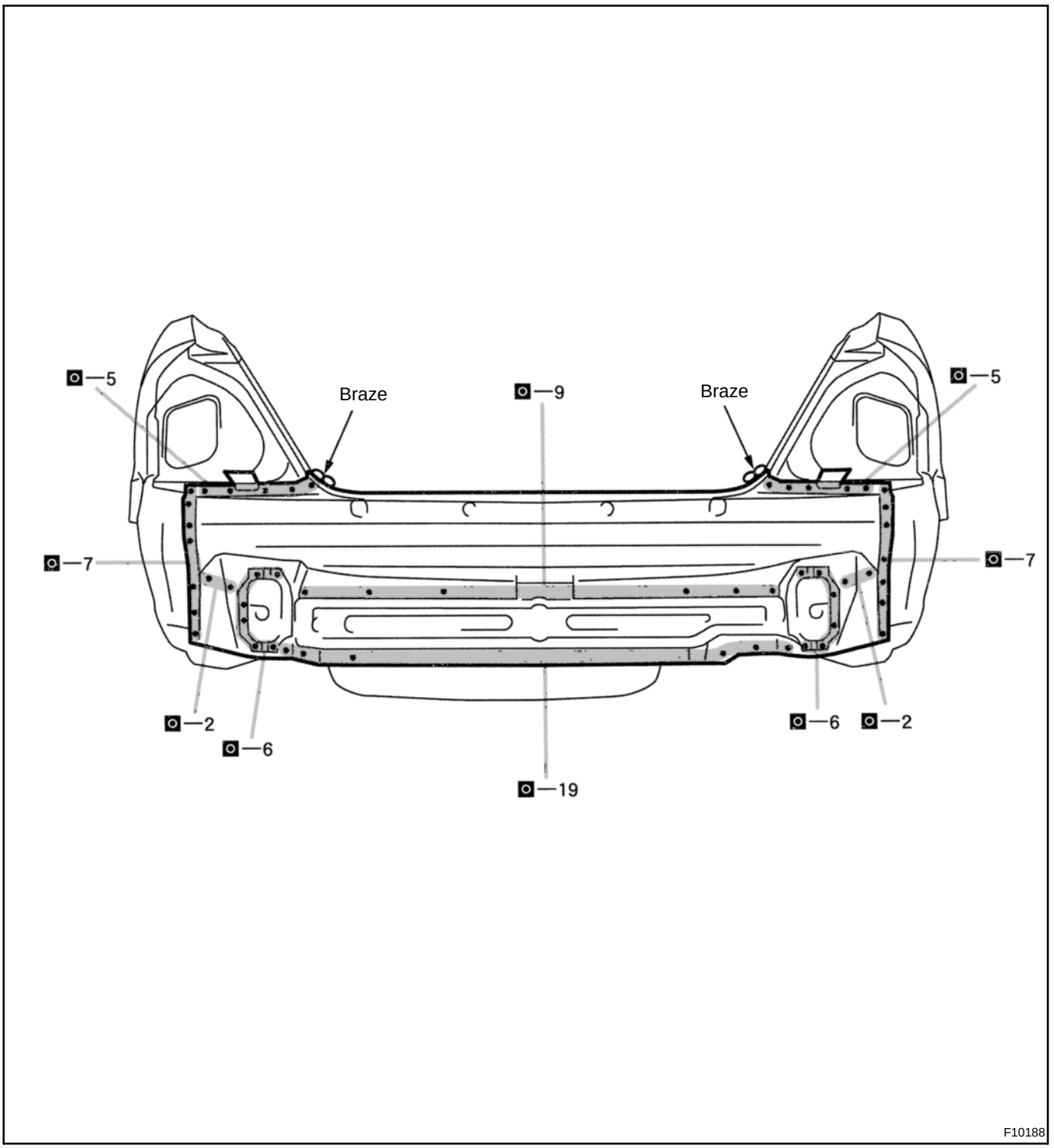

3. APPLYING SEALER TO THE INSIDE OF THE VEHICLE (See page PC-1)

4. APPLYING SEALER TO THE REAR LUGGAGE COMPARTMENT (See page PC-1)

5. APPLYING UNDER COATING (See page PC-6)

6. APPLYING ANTI-RUST AGENT

(a) After applying the top coat layer, apply the anti-rust agent to the inside of the necked section structural weld spots.

CENTER BODY PILLAR (CUT)

REPLACEMENT

1. REMOVE CENTER BODY PILLAR

(a) Cut and join the parts at the locations as shown below.

(b) Shift the each cut and join location of the pillar section. (center body outer pillar, center body pillar upper reinforcement and center body inner pillar.)

(c) Shift the each cut and join location of the rocker section. (center body outer pillar and center body pillar lower reinforcement.)

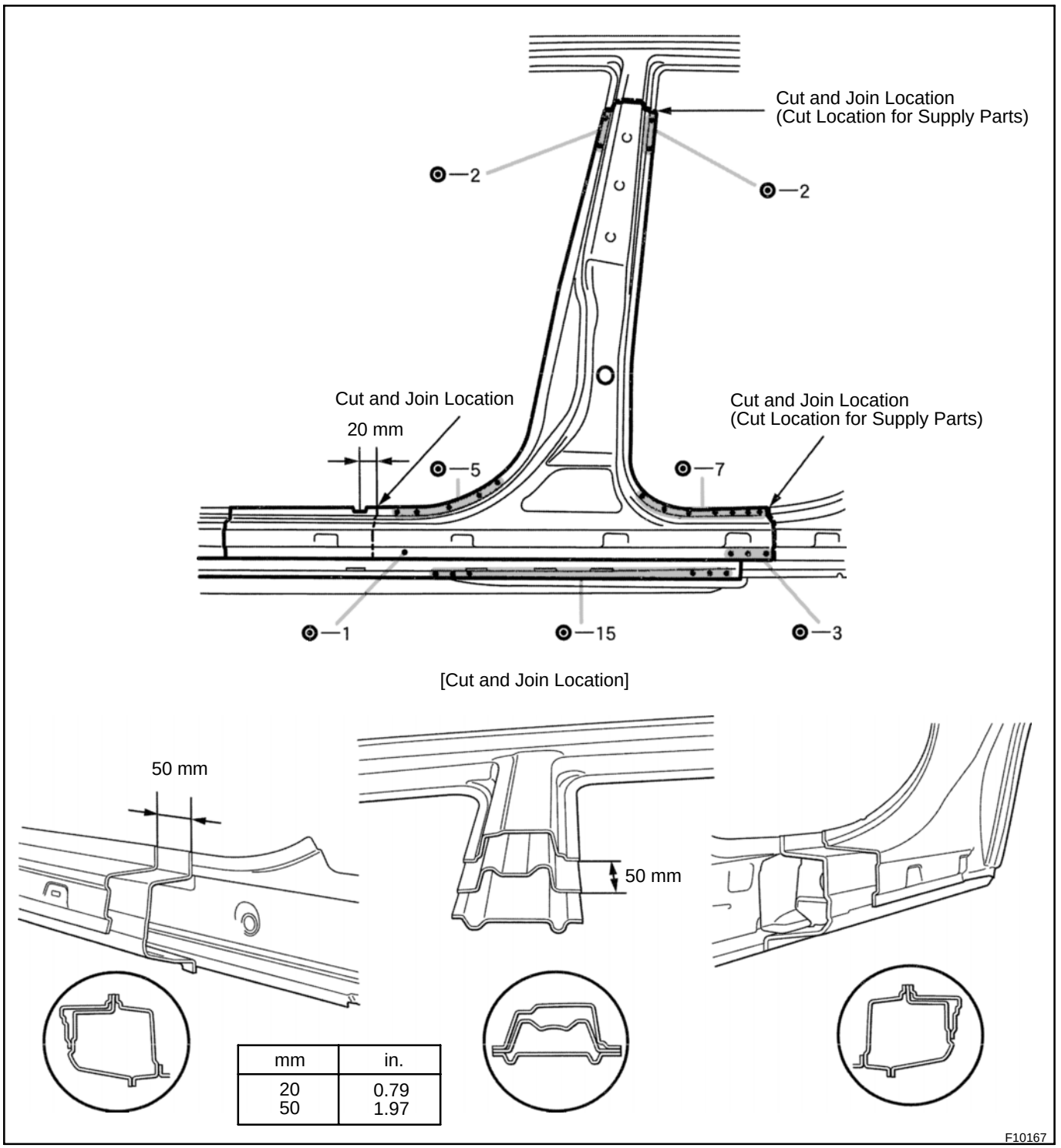

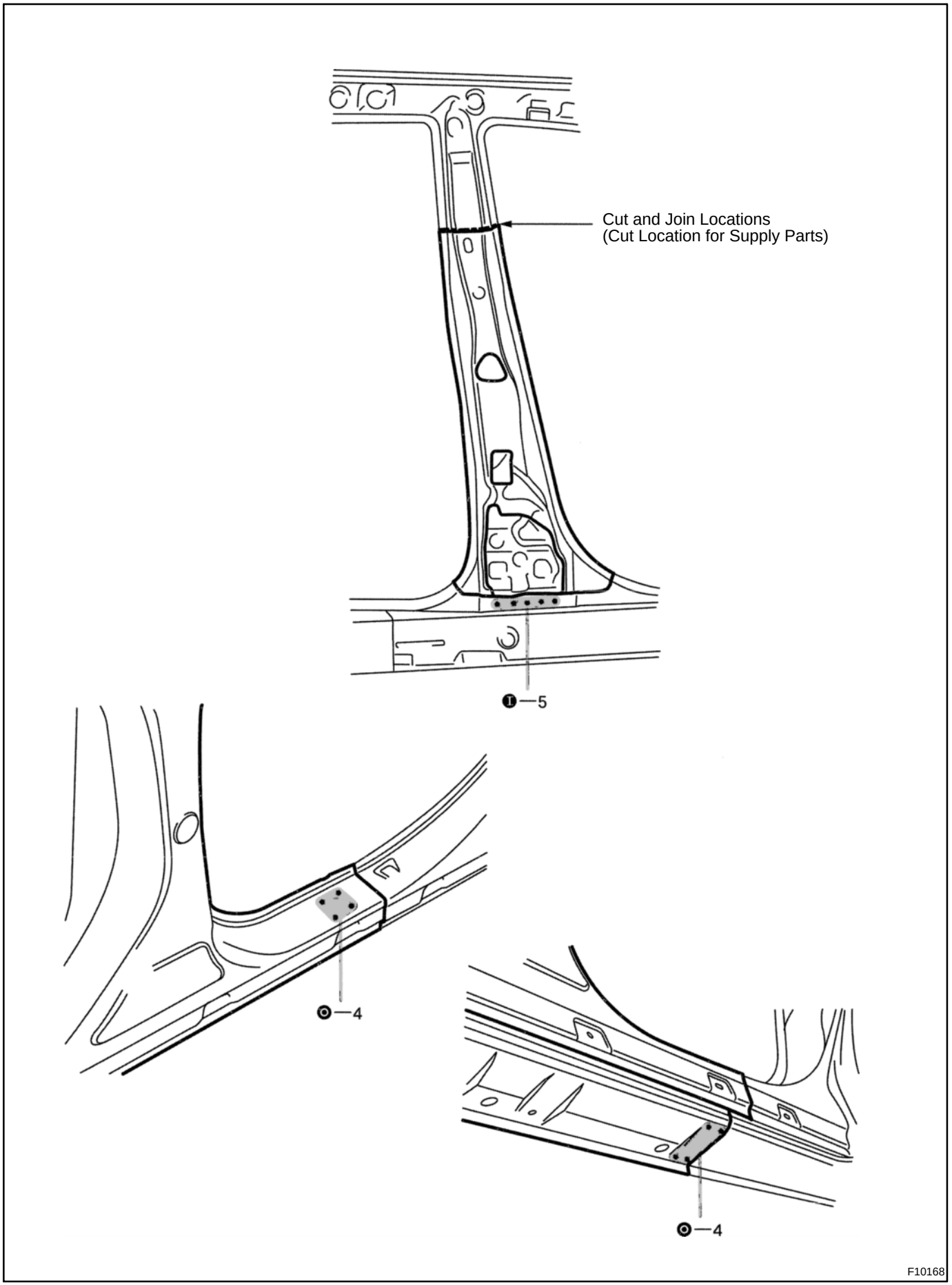
Cut and Join Locations
(Cut Location for Supply Parts)
1 —5
⊙—4
⊙—4
F10168

2. INSTALL CENTER BODY PILLAR

HINT:
Inspect the fitting of the front door and rear door, etc., before welding since this affects the appearance of the finish.

(a) Before temporarily installing the new parts, weld the center body inner pillar, center body pillar lower reinforcement and center body pillar upper reinforcement.

(b) After welding the center body inner pillar, center body pillar lower reinforcement and center body pillar upper reinforcement to the vehicle, install the center body outer pillar.

(c) Temporarily install the new parts and measure each part in accordance with the body dimension diagram.

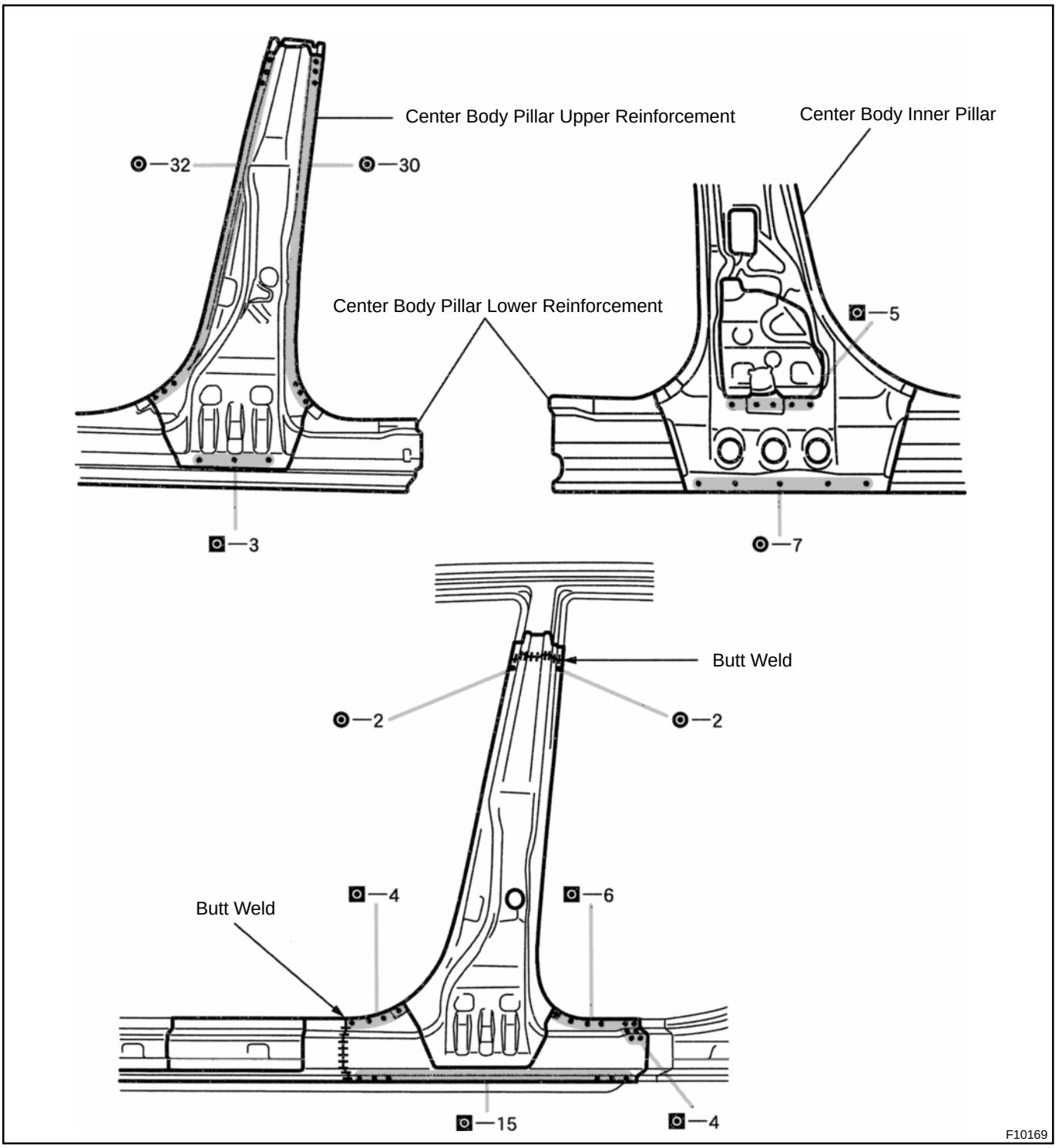

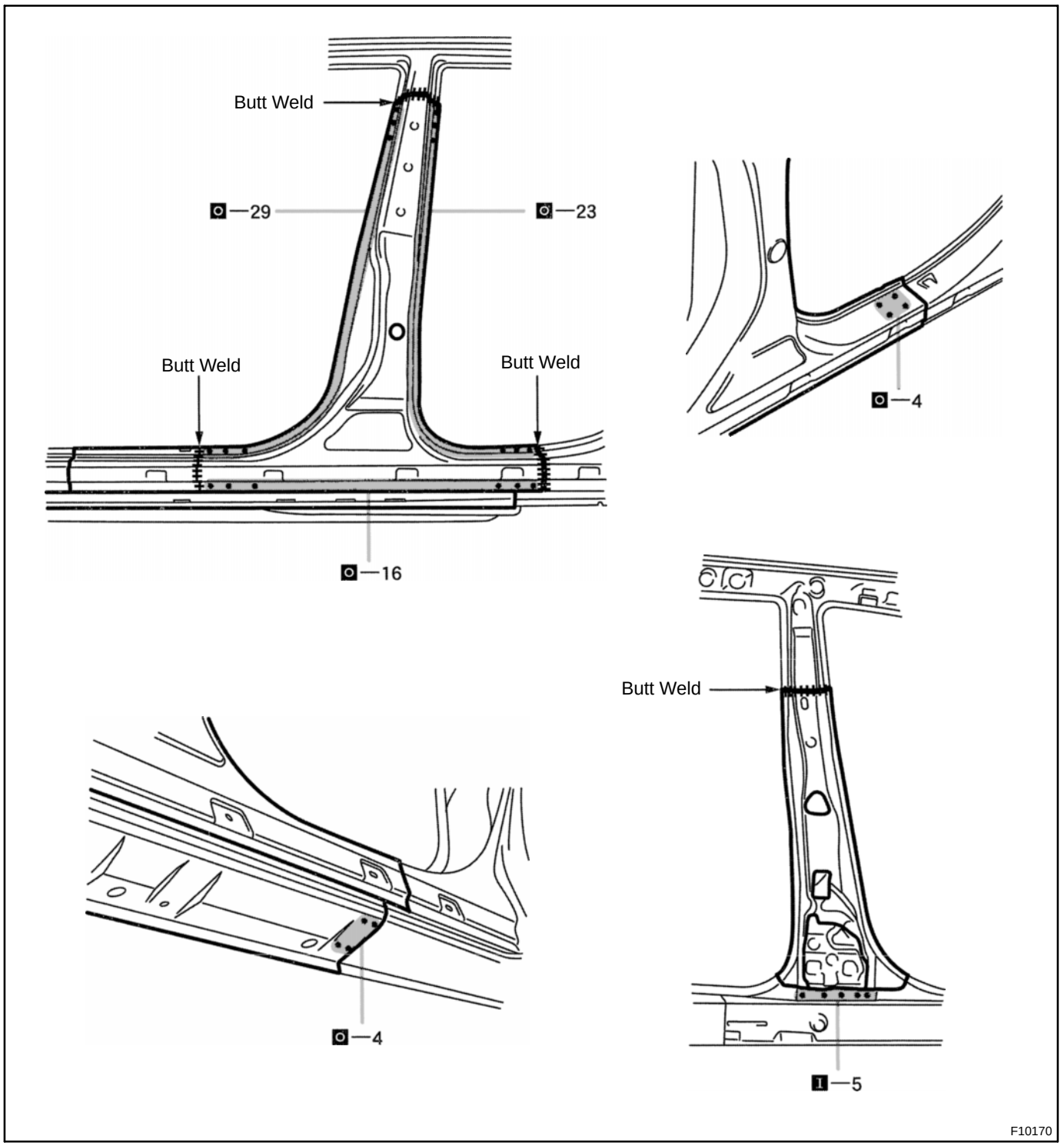

3. **MEASURING THE OPENING PORTION DIMENSIONS (See page BP-84)**
4. **APPLYING SEALER TO THE INSIDE OF THE VEHICLE (See page PC-1)**
5. **APPLYING UNDER COATING (See page PC-6)**
6. **CHARGING THE POLYURETHANE FOAM (See page PC-8)**
7. **APPLYING ANTI-RUST AGENT**

(a) After applying the top coat layer, apply the anti-rust agent to the inside of the necked section structural weld spots.

COWL TOP SIDE PANEL (ASSY)

REPLACEMENT

1. REMOVE COWL TOP SIDE PANEL

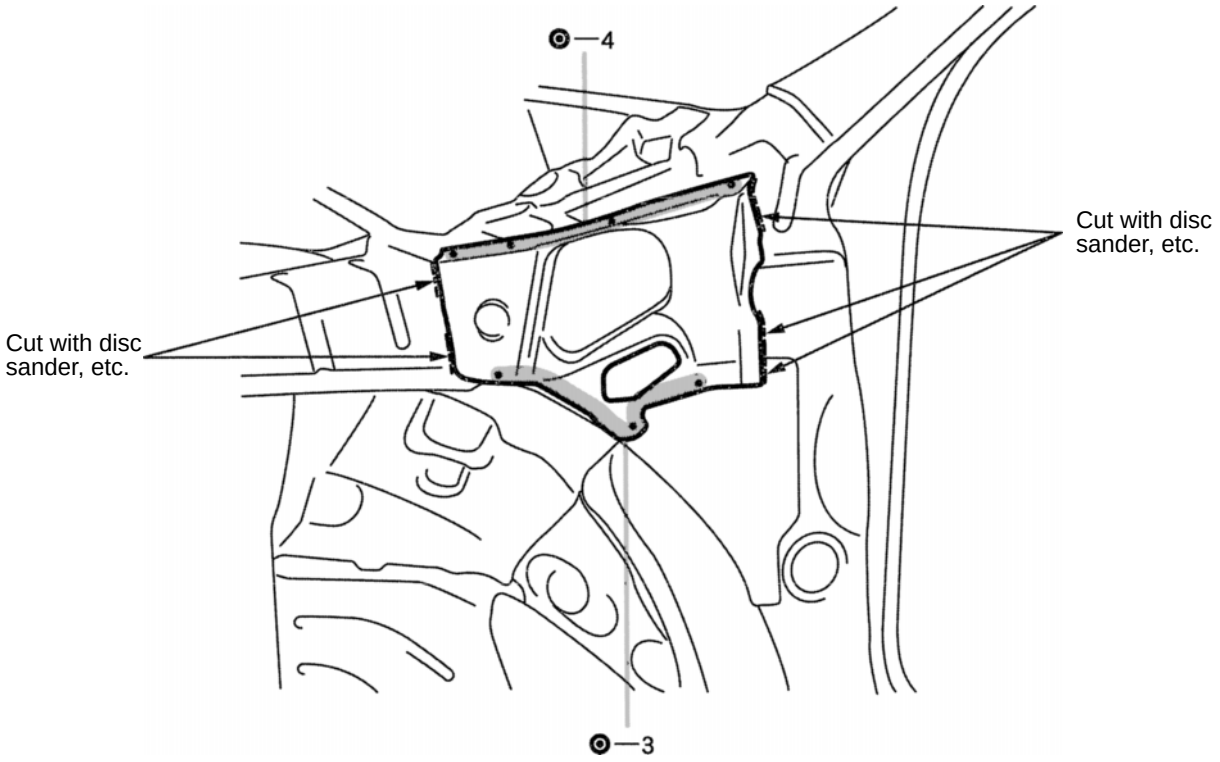

F10154

2. INSTALL COWL TOP SIDE PANEL

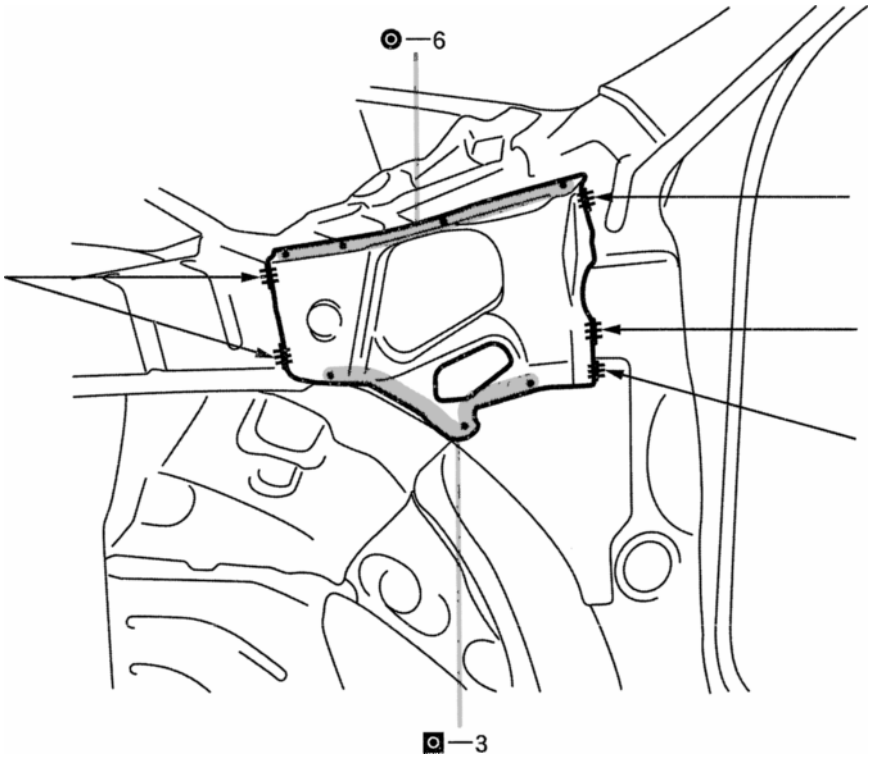

mm	in.
14	0.55
16	0.63
20●	0.79
30	1.18

F10155

3. APPLYING SEALER TO THE ENGINE COMPARTMENT (See page PC-1)

4. APPLYING ANTI-RUST AGENT

(a) After applying the top coat layer, apply the anti-rust agent to the inside of the necked section structural weld spots.

FRONT CROSSMEMBER (ASSY)

REPLACEMENT

1. REMOVE FRONT CROSSMEMBER

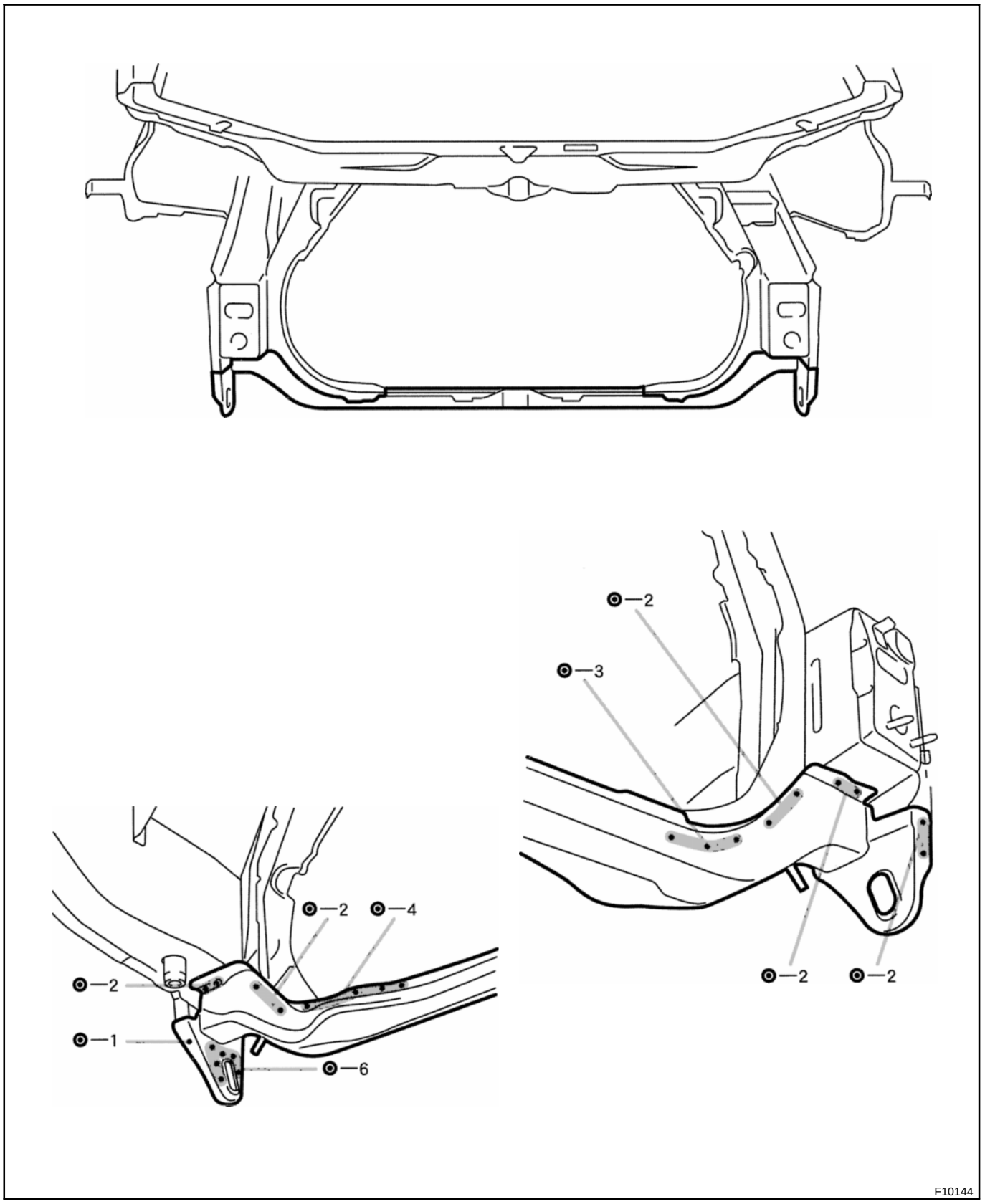

2. INSTALL FRONT CROSSMEMBER

(a) Temporarily install the new parts and measure each part in accordance with the body dimension diagram.

HINT:
First install the hood lock support.

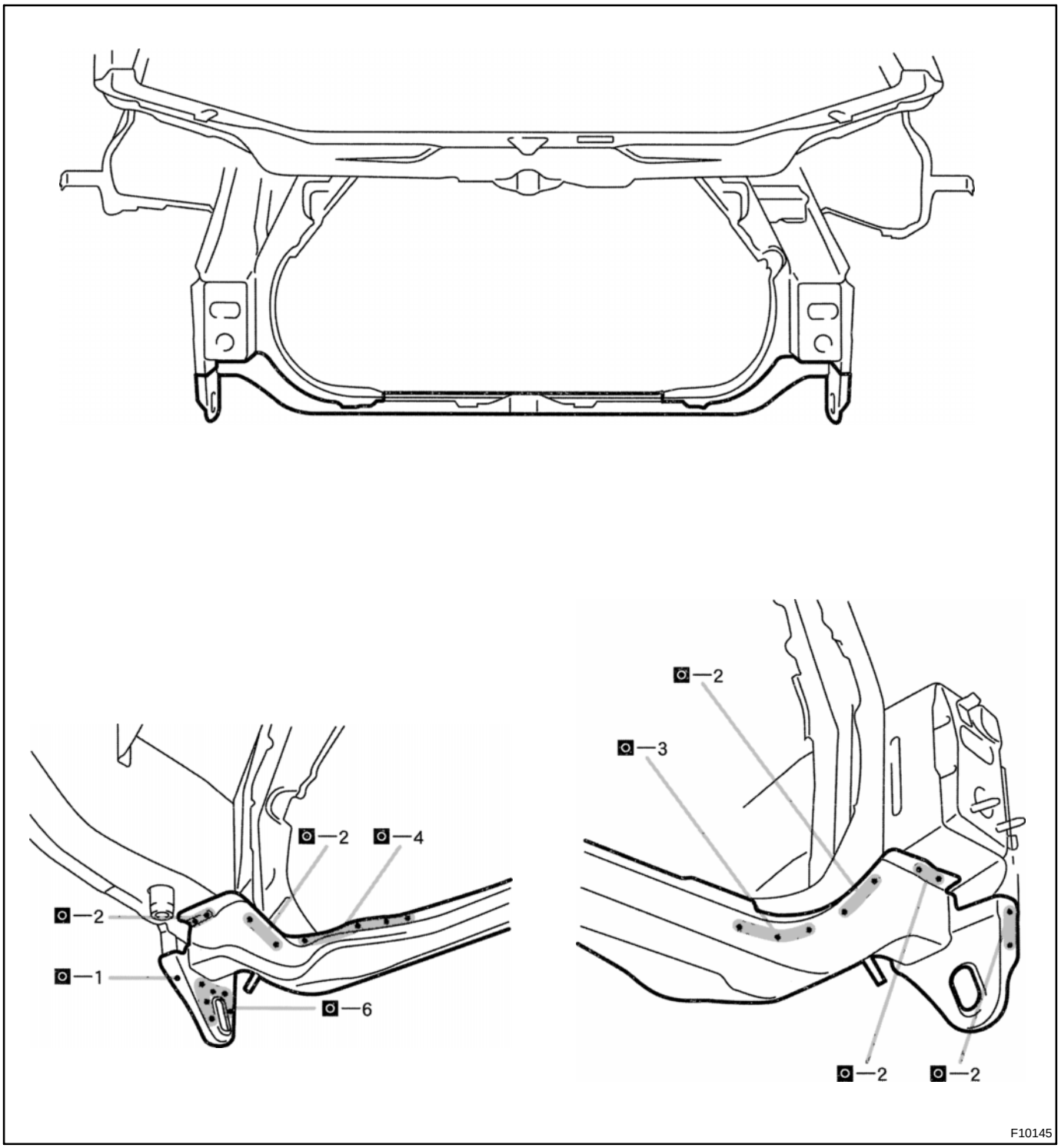

3. MEASURING THE ENGINE COMPARTMENT DIMENSIONS (See page BP-81)

4. MEASURING THE UNDERBODY DIMENSIONS (See page BP-85)

5. APPLYING ANTI-RUST AGENT

(a) After applying the top coat layer, apply the anti-rust agent to the inside of the necked section structural weld spots.

FRONT FENDER APRON (ASSY)

REPLACEMENT

1. REMOVE RADIATOR UPPER SUPPORT (See page BP-1)
2. REMOVE COWL TOP SIDE PANEL (See page BP-18)
3. REMOVE FRONT FENDER APRON

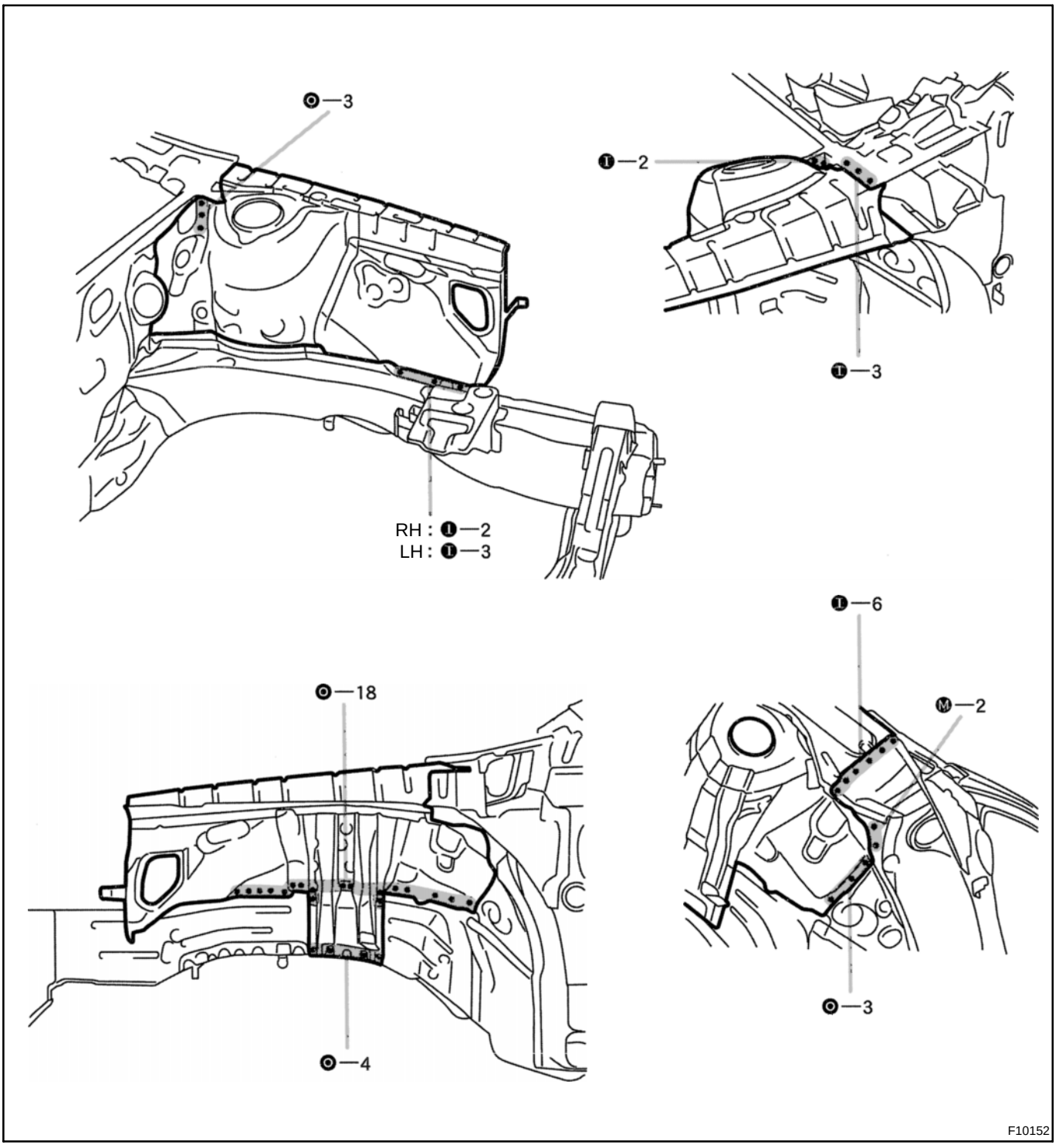

4. INSTALL FRONT FENDER APRON

HINT:
Inspect the fitting of the front fender and hood, etc. before welding, since this affects the appearance of the finish.

(a) Temporarily install the new parts and measure each part in accordance with the body dimension diagram.

HINT:
Make sure each measurement is correct, as this parts affects the front wheel alignment.

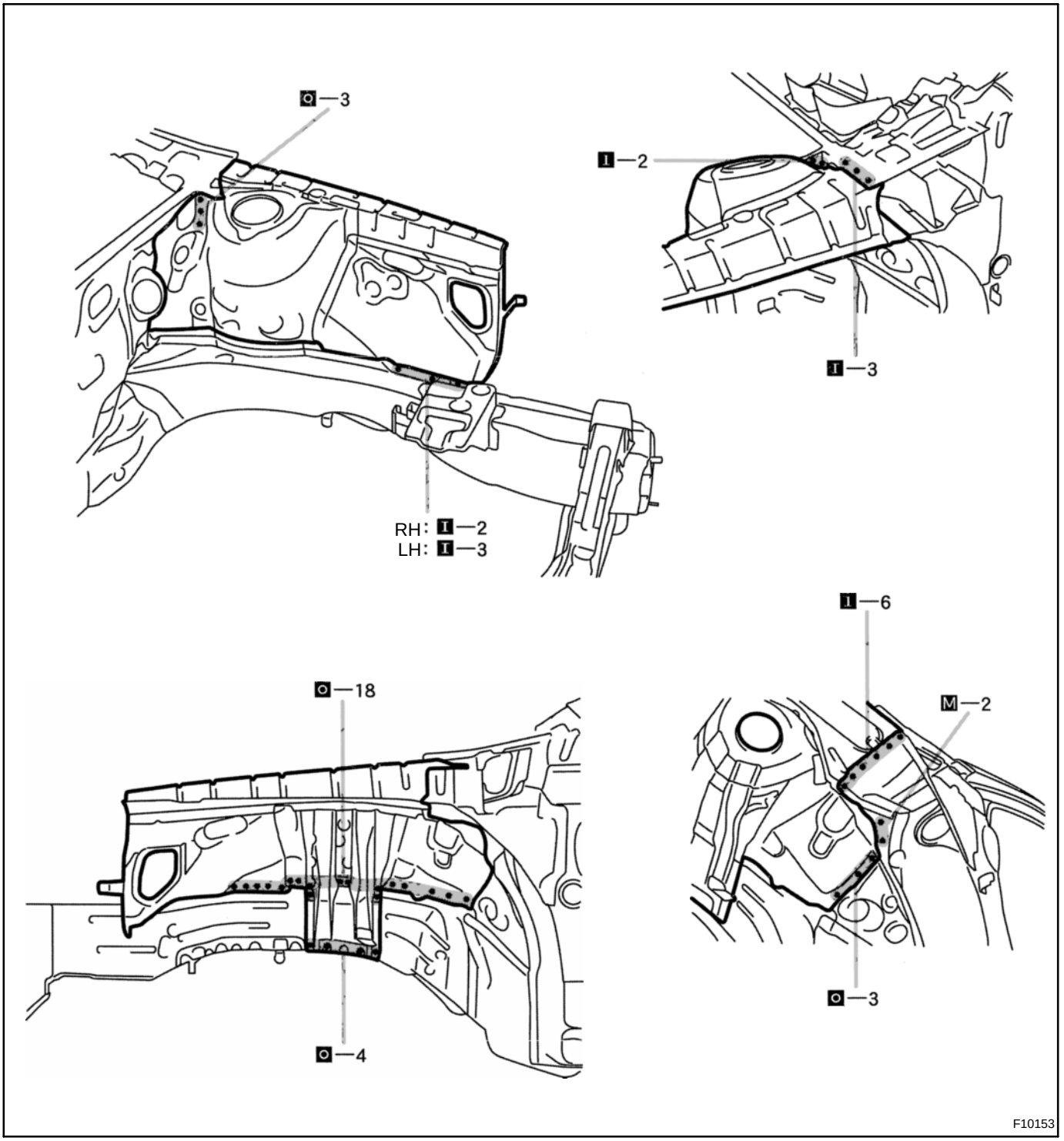

5. MEASURING THE ENGINE COMPARTMENT DIMENSIONS (See page BP-81)

6. INSTALL COWL TOP SIDE PANEL (See page BP-18)

7. INSTALL RADIATOR UPPER SUPPORT (See page BP-1)

8. APPLYING SEALER TO THE ENGINE COMPARTMENT (See page PC-1)

9. APPLYING UNDER COATING (See page PC-6)

10. APPLYING ANTI-RUST AGENT

(a) After applying the top coat layer, apply the anti-rust agent to the inside of the necked section structural weld spots.

FRONT SIDE MEMBER (ASSY)

REPLACEMENT

1. **REMOVE RADIATOR UPPER SUPPORT (See page BP-1)**
2. **REMOVE FRONT CROSSMEMBER SIDE GUSSET (See page BP-3)**
3. **REMOVE FRONT CROSSMEMBER (See page BP-5)**
4. **REMOVE COWL TOP SIDE PANEL (See page BP-18)**
5. **REMOVE FRONT FENDER APRON (See page BP-15)**
6. **REMOVE FRONT SIDE MEMBER**

(a) Leave the floor side member No. 4 reinforcement to the vehicle, remove the front side member.

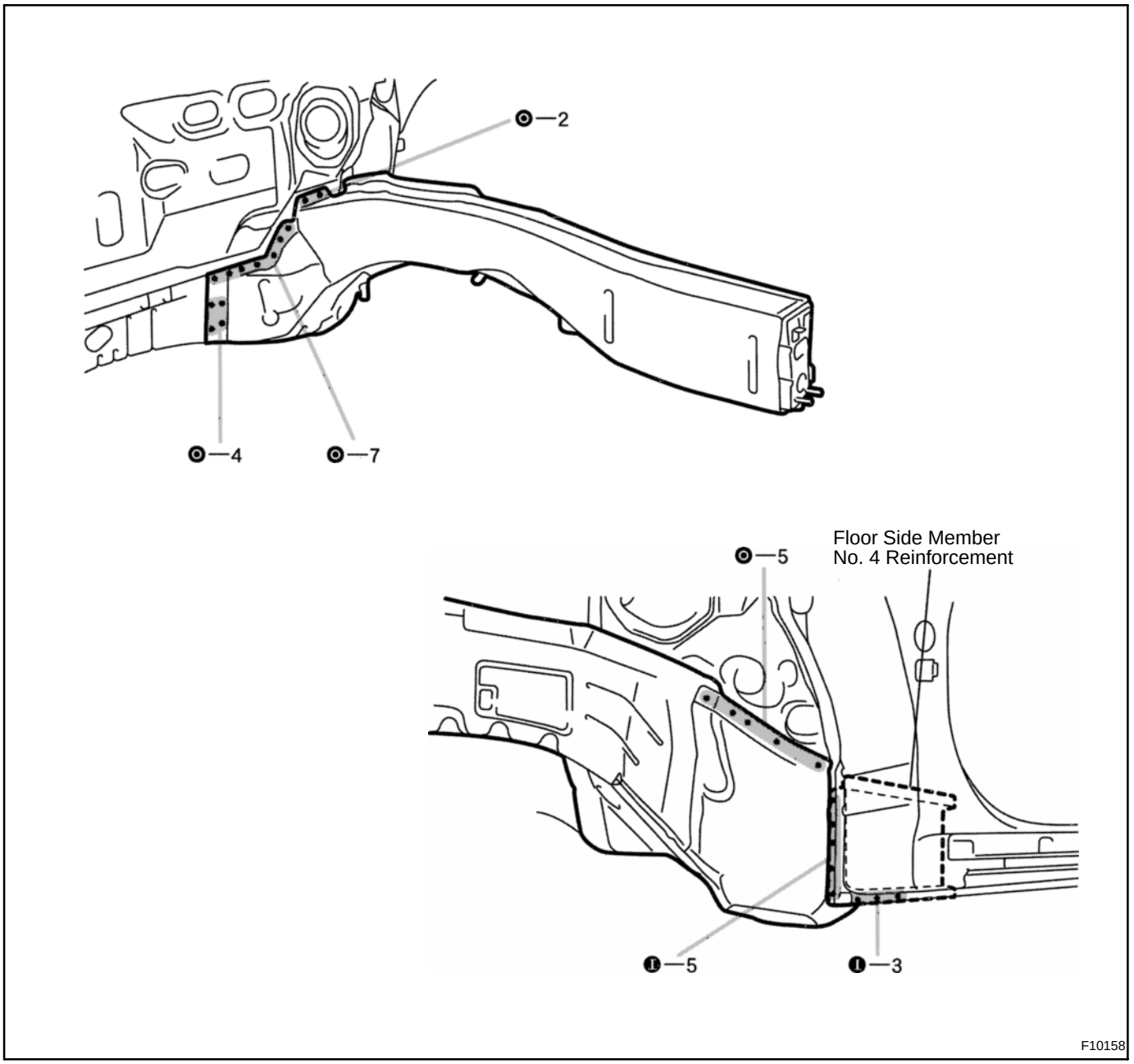

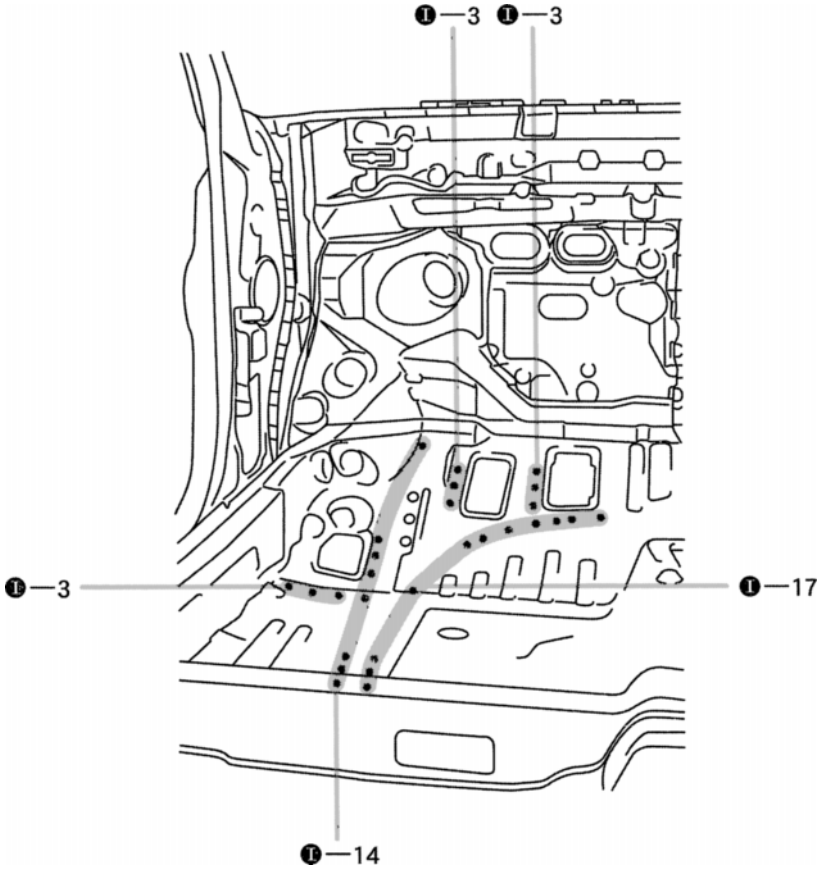

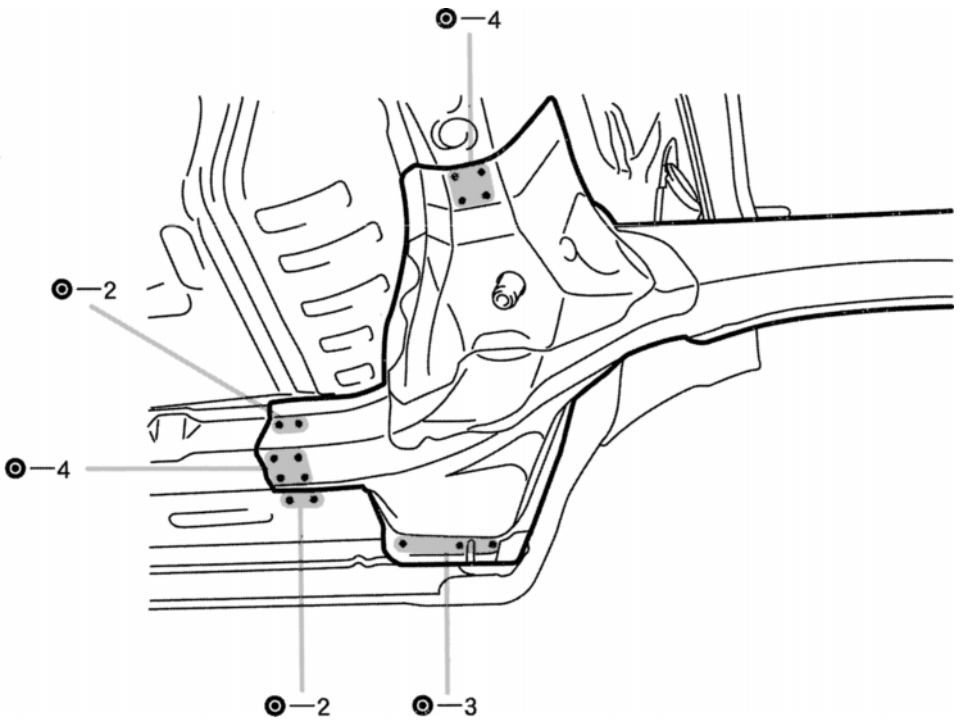

F10159

7. INSTALL FRONT SIDE MEMBER

(a) Remove the floor side member No. 4 reinforcement from the new parts of front side member.

(b) Temporarily install the new parts and measure each part in accordance with the body dimension diagram.

HINT:
Make sure each measurement is correct, as this parts affects the front wheel alignment.

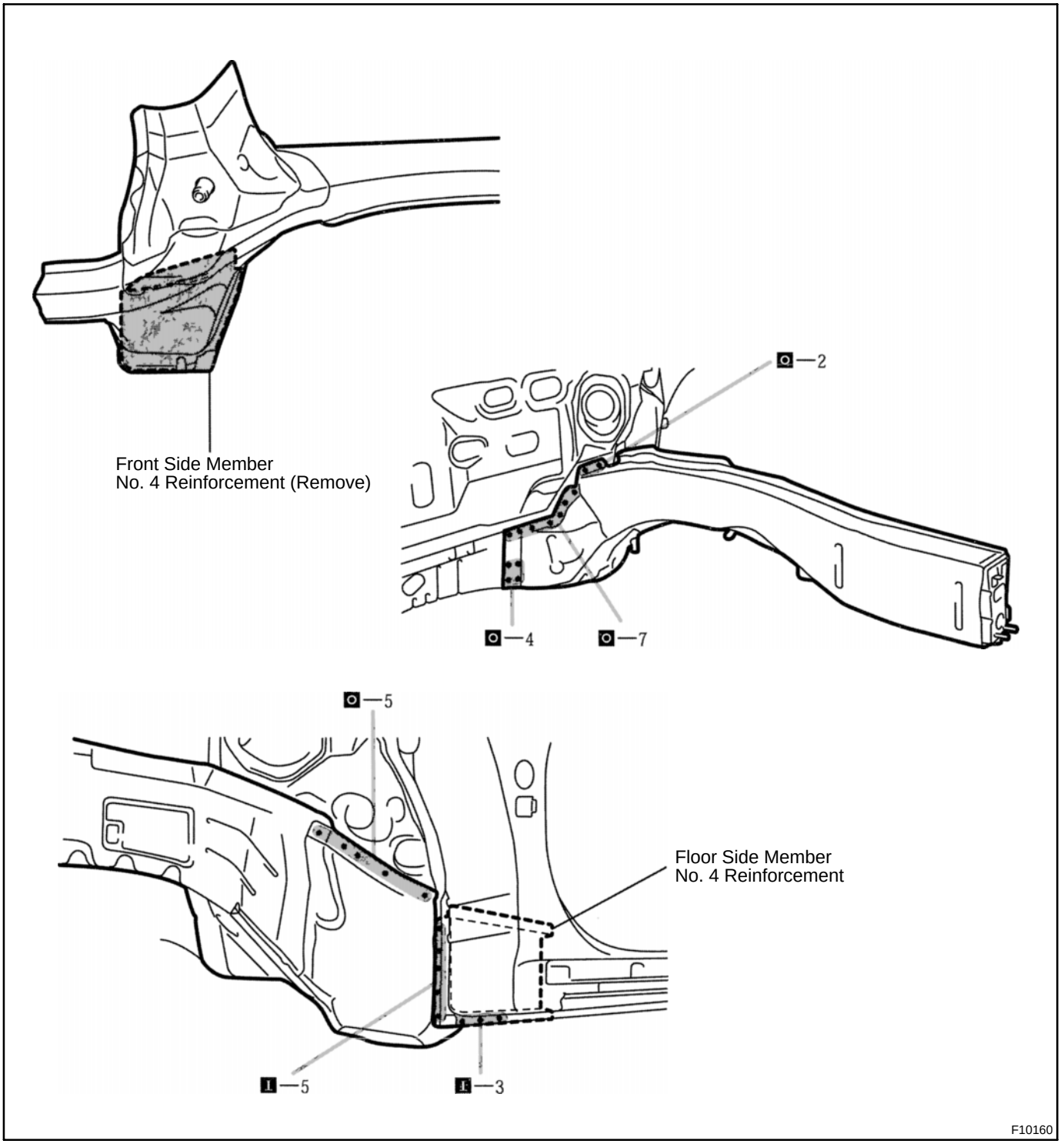

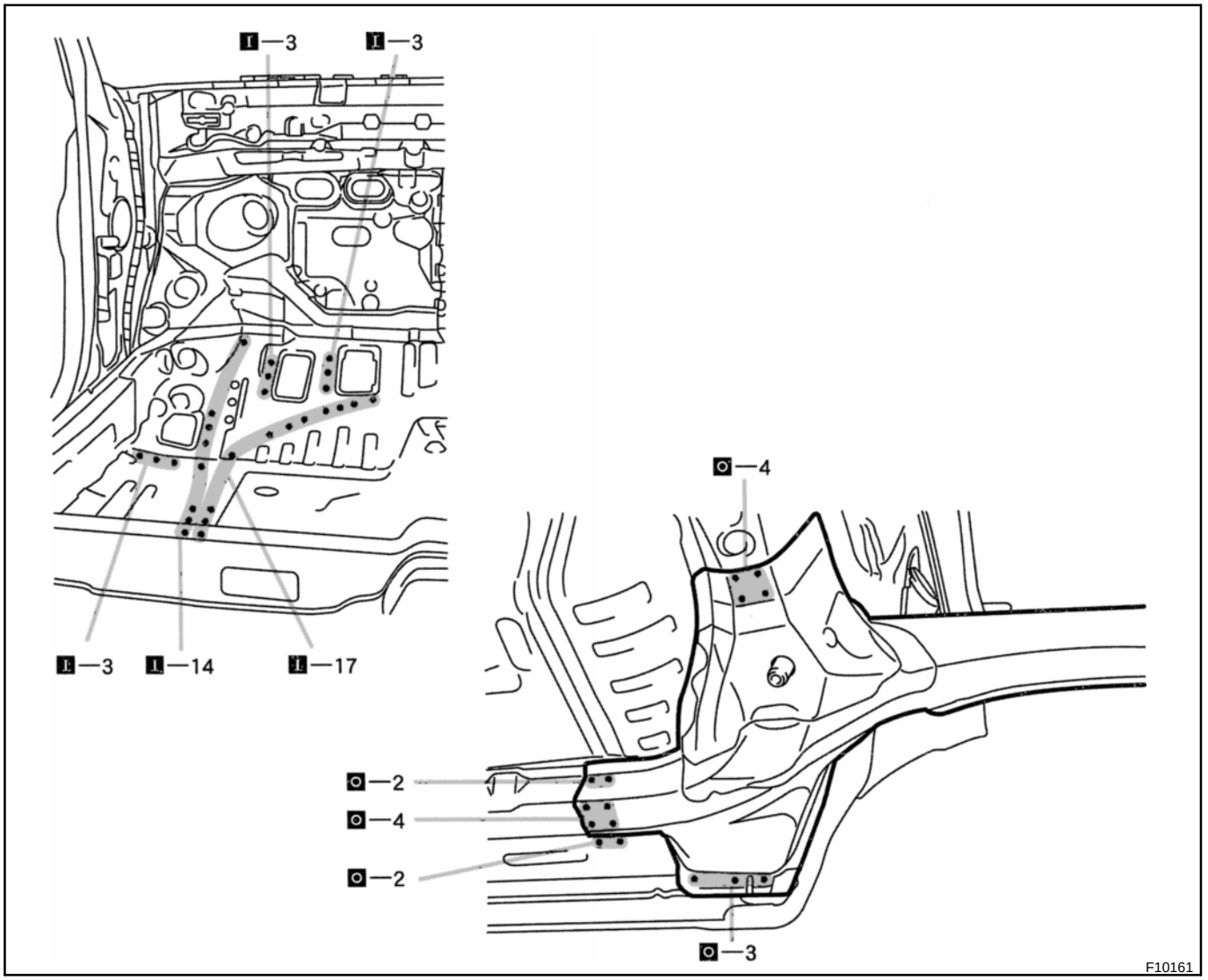

8. **MEASURING THE ENGINE COMPARTMENT DIMENSIONS (See page BP-81)**
9. **MEASURING THE UNDER BODY DIMENSIONS (See page BP-85)**
10. **INSTALL FRONT FENDER APRON (See page BP-15)**
11. **INSTALL COWL TOP SIDE PANEL (See page BP-18)**
12. **INSTALL FRONT CROSSMEMBER (See page BP-5)**
13. **INSTALL FRONT CROSSMEMBER SIDE GUSSET (See page BP-3)**
14. **INSTALL RADIATOR UPPER SUPPORT (See page BP-1)**
15. **APPLYING SEALER TO THE ENGINE COMPARTMENT (See page PC-1)**
16. **APPLYING SEALER TO THE INSIDE OF THE VEHICLE (See page PC-2)**
17. **APPLYING UNDER COATING (See page PC-6)**
18. **APPLYING ANTI-RUST AGENT**

(a) After applying the top coat layer, apply the anti-rust agent to the inside of the necked section structural weld spots.

19. **INSTALL FRONT FLOOR SILENCER SHEET (See page PC-9)**

FRONT APRON TO COWL SIDE UPPER MEMBER (ASSY)

REPLACEMENT

1. **REMOVE COWL TOP SIDE PANEL (See page BP-18)**
2. **REMOVE RADIATOR UPPER SUPPORT (See page BP-1)**
3. **REMOVE FRONT FENDER FRONT APRON (See page BP-9)**
4. **REMOVE FRONT APRON TO COWL SIDE UPPER MEMBER**

(a) After removing the front apron to cowl side lower member, remove the front apron to cowl side upper member.

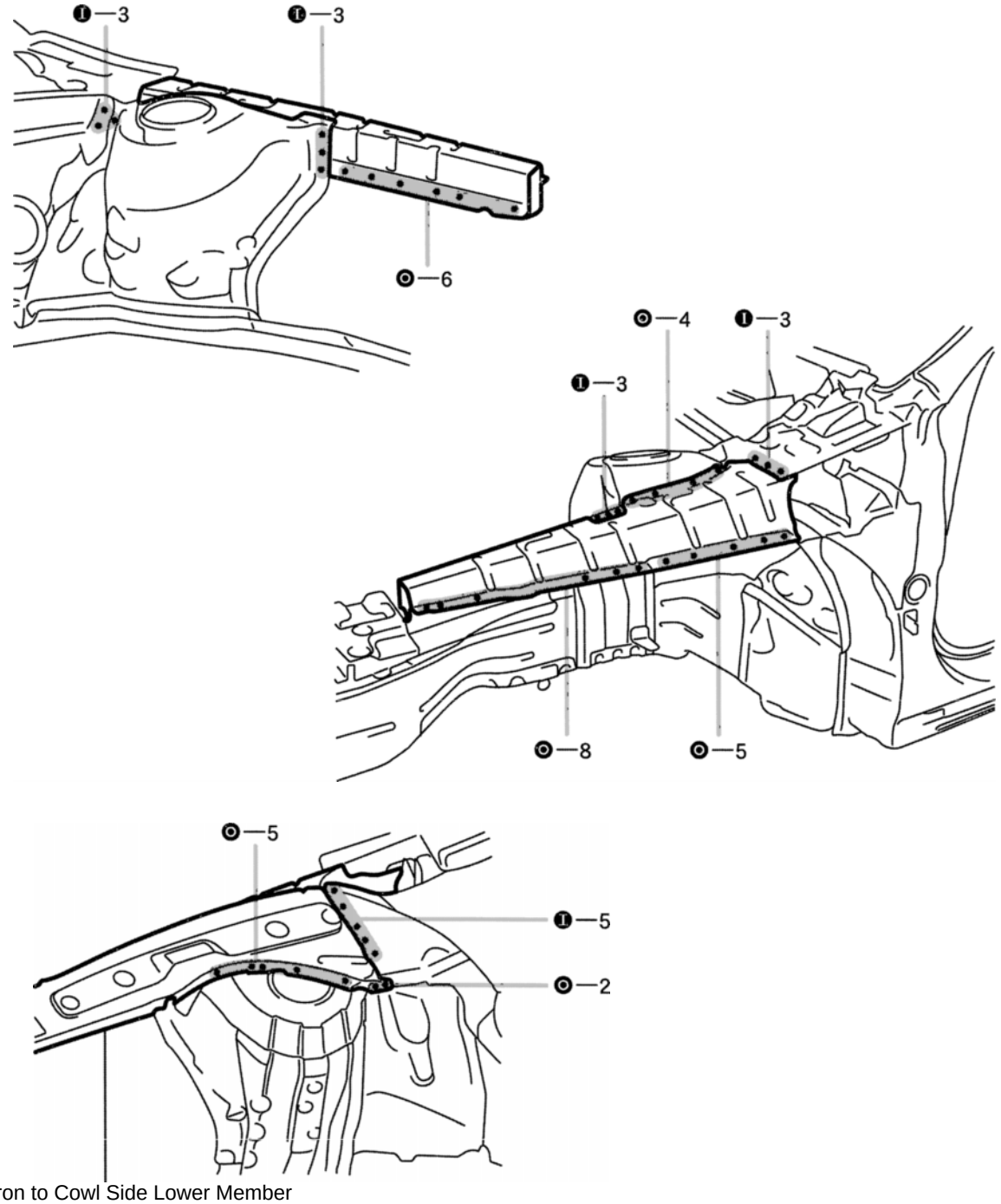

5. INSTALL FRONT APRON TO COWL SIDE UPPER MEMBER

HINT:
Inspect the fitting of the front fender and hood, etc. before welding, since this affects the appearance of the finish.

(a) Temporarily install the new parts and measure each part in accordance with the body dimension diagram.

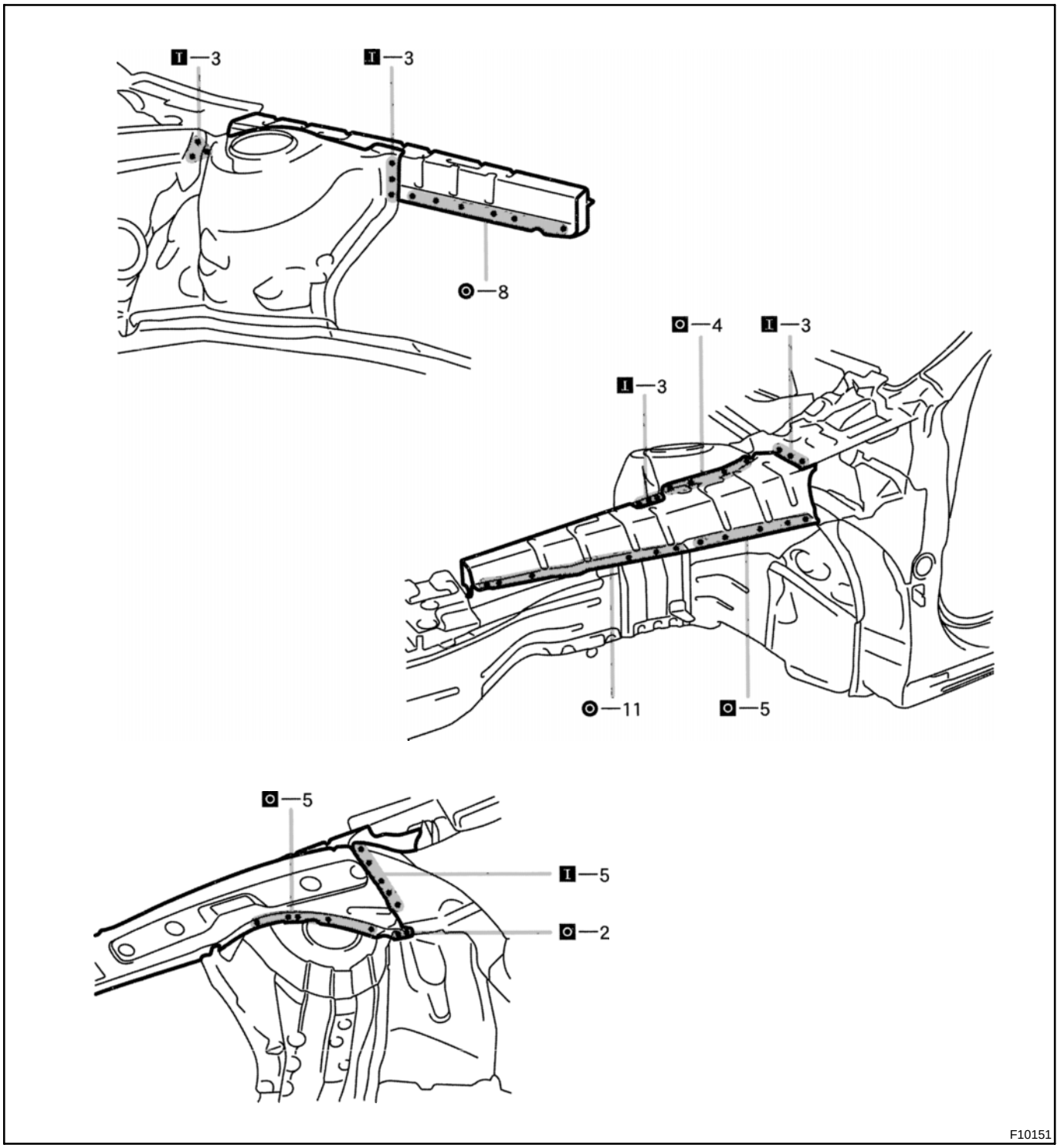

6. INSTALL FRONT FENDER FRONT APRON (See page BP-9)

7. INSTALL RADIATOR UPPER SUPPORT (See page BP-1)

8. INSTALL COWL TOP SIDE PANEL (See page BP-18)

9. APPLYING SEALER TO THE ENGINE COMPARTMENT (See page PC-1)

10. APPLYING ANTI-RUST AGENT

(a) After applying the top coat layer, apply the anti-rust agent to the inside of the necked section structural weld spots.

FRONT BODY PILLAR (CUT)

REPLACEMENT

1. REMOVE COWL TOP SIDE PANEL (See page BP-18)

2. REMOVE FRONT BODY PILLAR

(a) Cut and join the parts at the locations as shown below.

HINT:

- *Shift the each cut and join locations of the outer pillar, pillar reinforcement and inner pillar.*
- *Shift the each cut and join locations of the rocker outer panel and center body pillar lower reinforcement.*
- *This part of the outer panel is reused, since the rocker panel section is cutoff at the rear the outer panel supply part cutting position.*

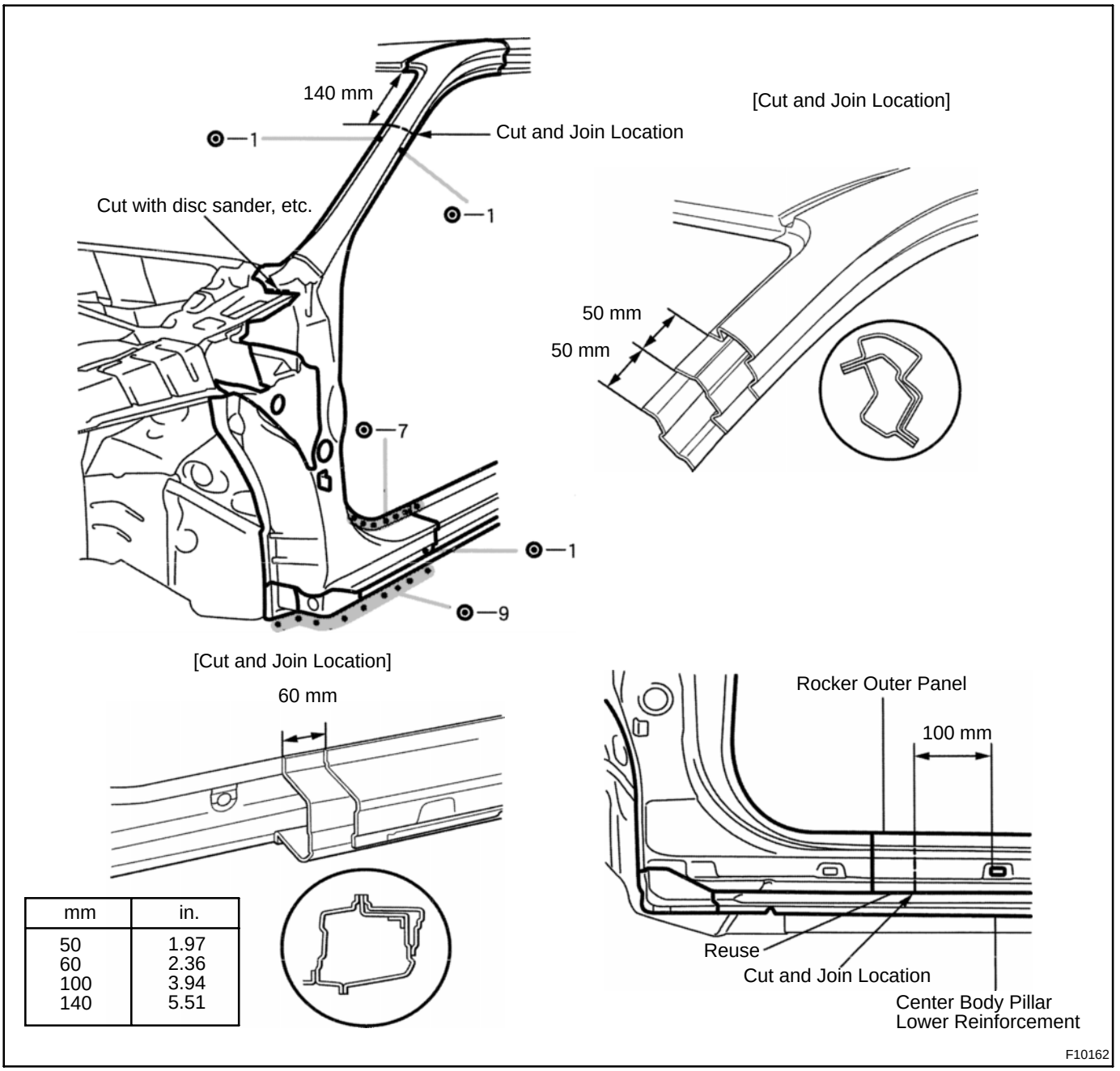

mm	in.
50	1.97
60	2.36
100	3.94
140	5.51

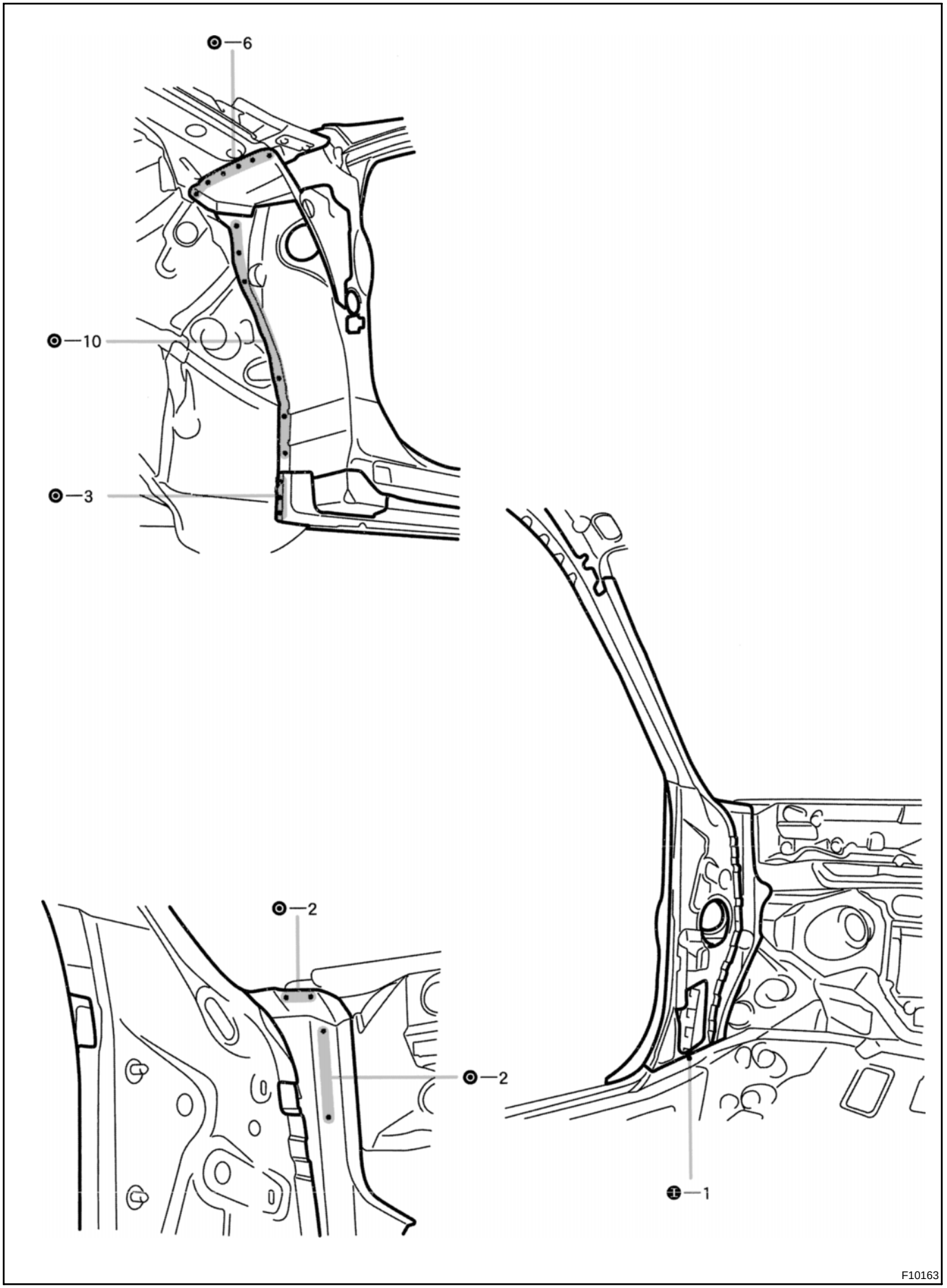
6
10
3
2
2
1
F10163

3. INSTALL FRONT BODY PILLAR

HINT:
Inspect the fitting of the front door, front fender and windshield glass, etc., before welding, since this affects the appearance of the finish.

(a) Before temporarily installing the new parts, weld the front pillar lower reinforcement, center body pillar lower reinforcement and front body inner pillar with standard points.

(b) After welding the front pillar lower reinforcement, center body pillar lower reinforcement and front body inner pillar to the vehicle, install the outer pillar.

(c) Temporarily install the new parts and measure each part in accordance with the body dimension diagram.

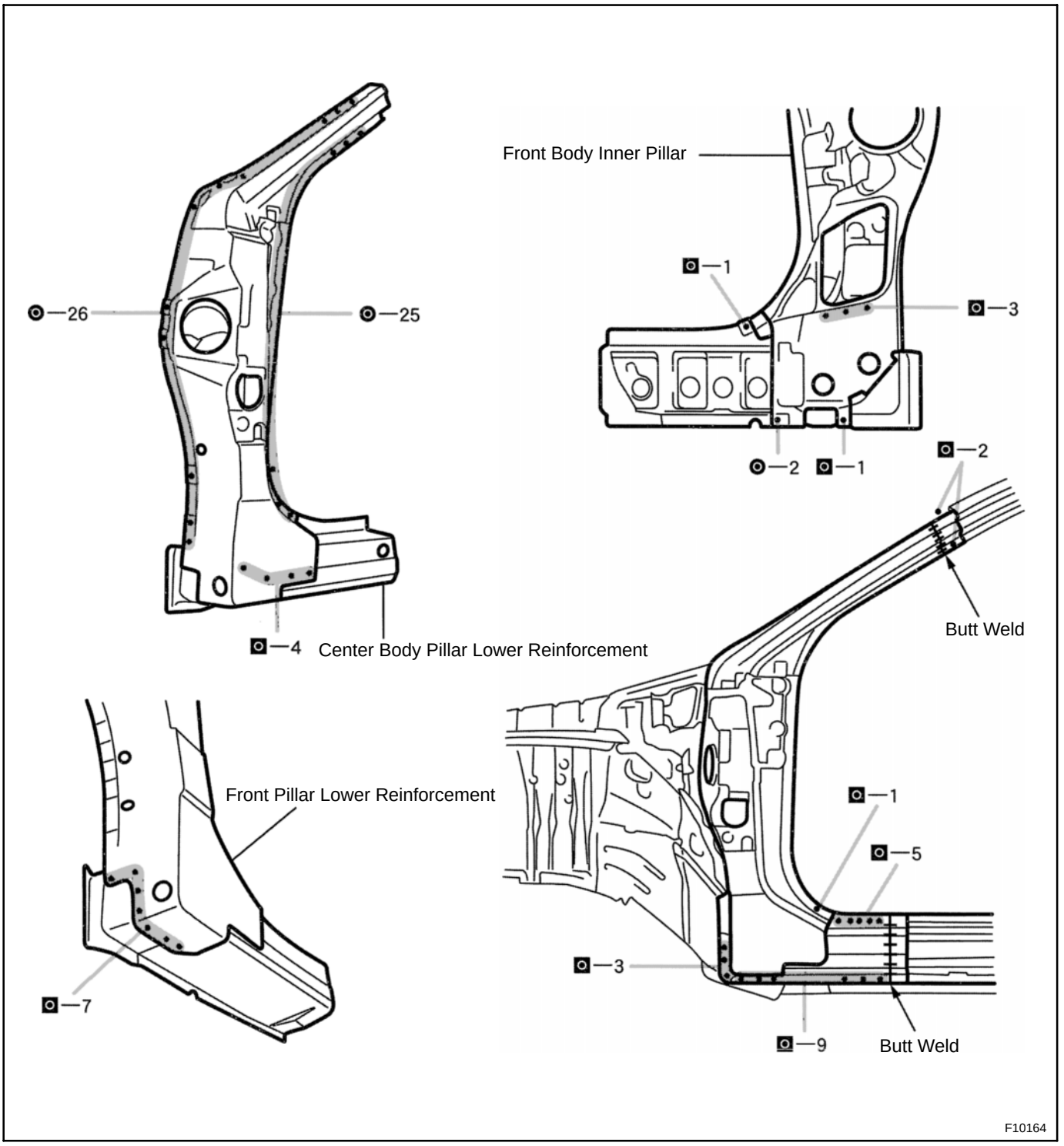

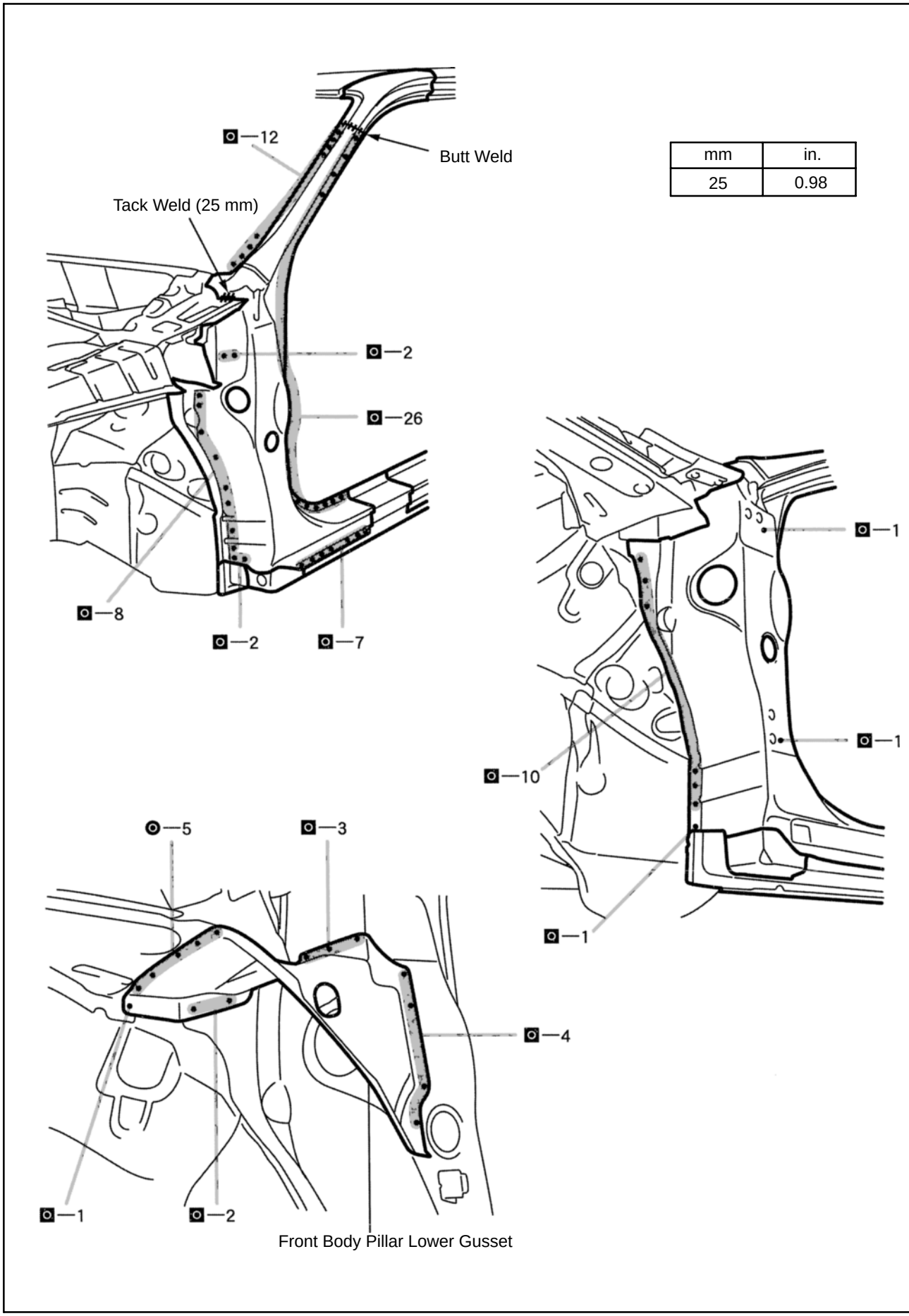
12
Butt Weld
Tack Weld (25 mm)
2
26
8
2
7
1
1
10
1
5
3
4
1
2
Front Body Pillar Lower Gusset
F10165

mm	in.
25	0.98

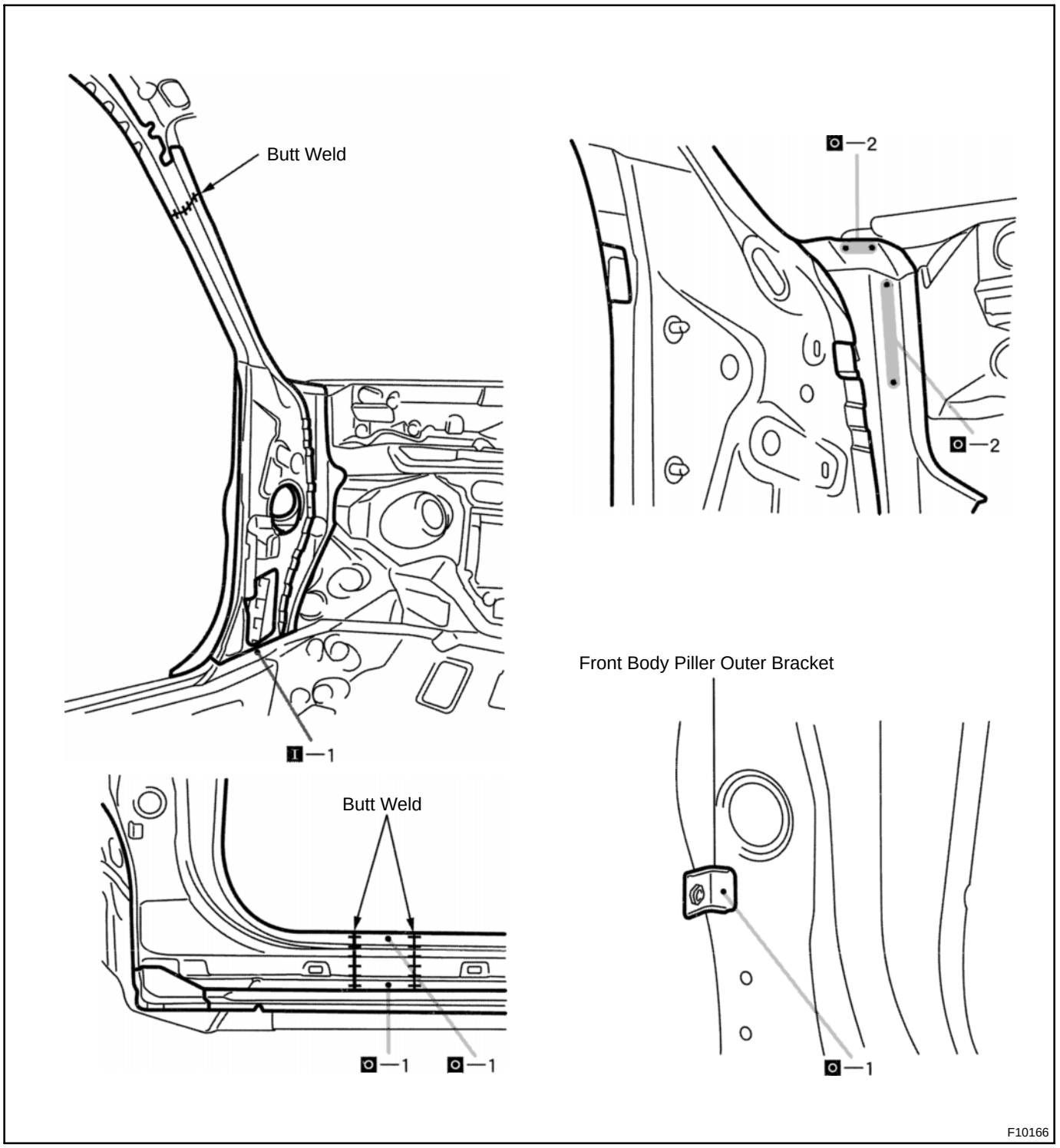

4. **MEASURING OPENING PORTION DIMENSIONS (See page BP-84)**
5. **INSTALL COWL TOP SIDE PANEL (See page BP-18)**
6. **APPLYING SEALER TO THE ENGINE COMPARTMENT (See page PC-1)**
7. **APPLYING SEALER TO THE INSIDE OF THE VEHICLE (See page PC-1)**
8. **APPLYING UNDER COATING (See page PC-6)**
9. **CHARGING THE POLYURTHANE FOAM (See page PC-8)**
10. **APPLYING ANTI-RUST AGENT**

(a) After applying the top coat layer, apply the anti-rust agent to the inside of the necked section structural weld spots.

FRONT CROSSMEMBER SIDE GUSSET (ASSY)

REPLACEMENT

1. REMOVE RADIATOR UPPER SUPPORT (See page BP-1)
2. REMOVE FRONT CROSSMEMBER SIDE GUSSET

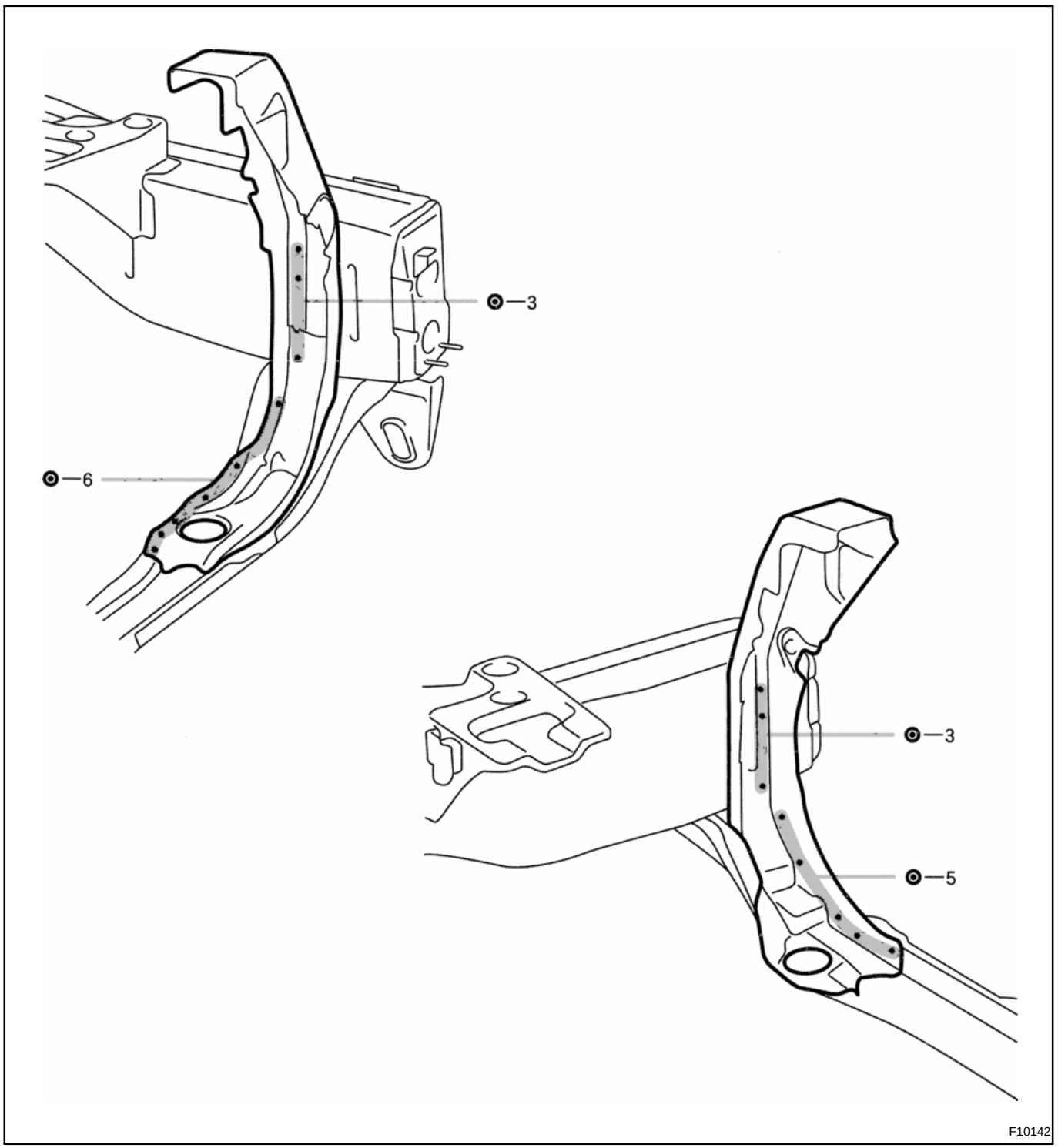

3. INSTALL FRONT CROSSMEMBER SIDE GUSSET

(a) Temporarily install the new parts and measure each part in accordance with the body dimension diagram.

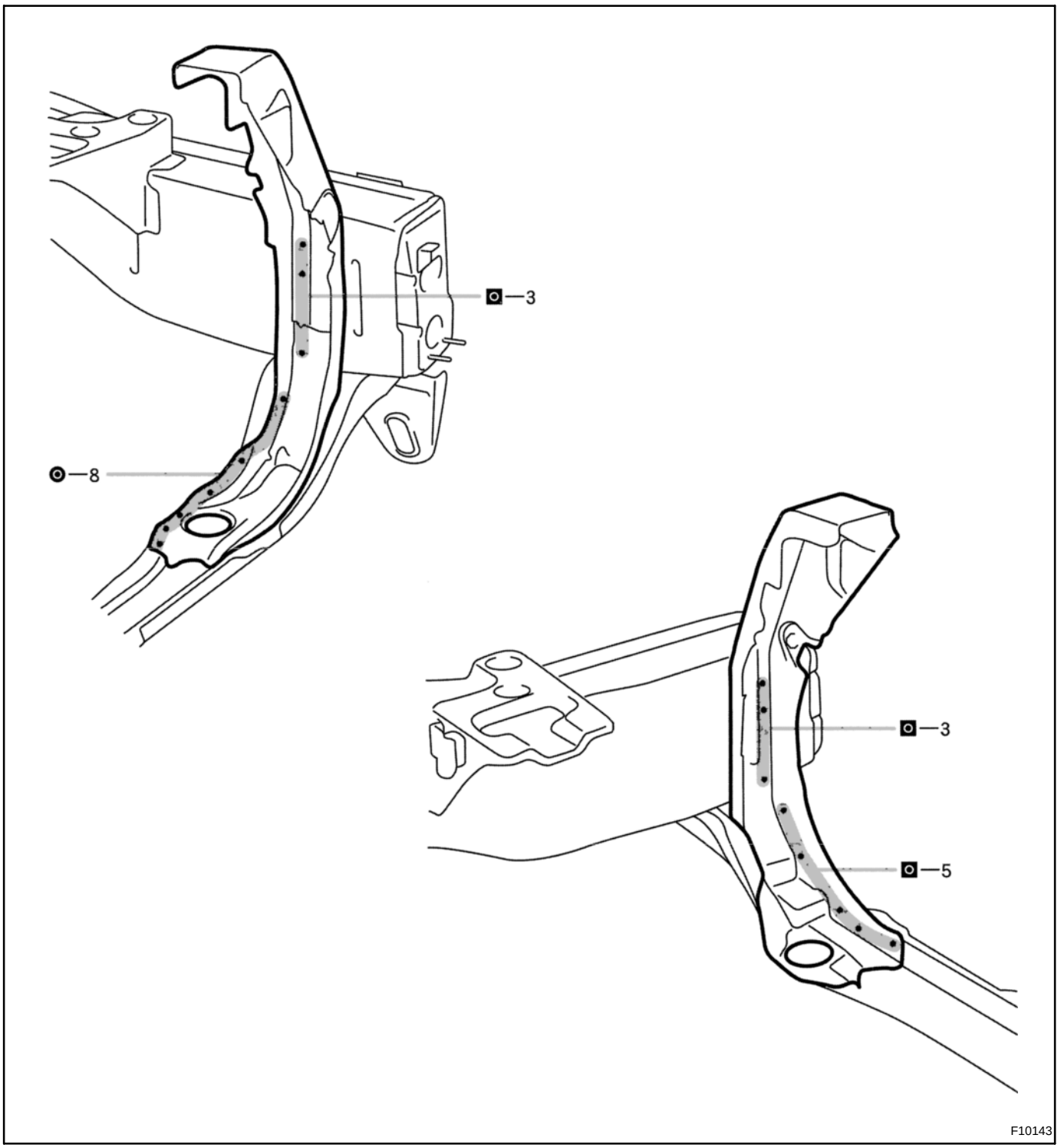

4. MEASURING THE ENGINE COMPARTMENT DIMENSIONS (See page BP-81)

5. INSTALL RADIATOR UPPER SUPPORT (See page BP-1)

6. APPLYING SEALER TO THE ENGINE COMPARTMENT (See page PC-1)

7. APPLYING ANTI-RUST AGENT

(a) After applying the top coat layer, apply the anti-rust agent to the inside of the necked section structural weld spots.

FRONT DOOR OUTER PANEL (ASSY)

REPLACEMENT

1. REMOVE FRONT DOOR OUTER PANEL

(a) Before removing the outer panel, make the installation position with a tape.

(b) After grinding off the hemming location, remove the outer panel.

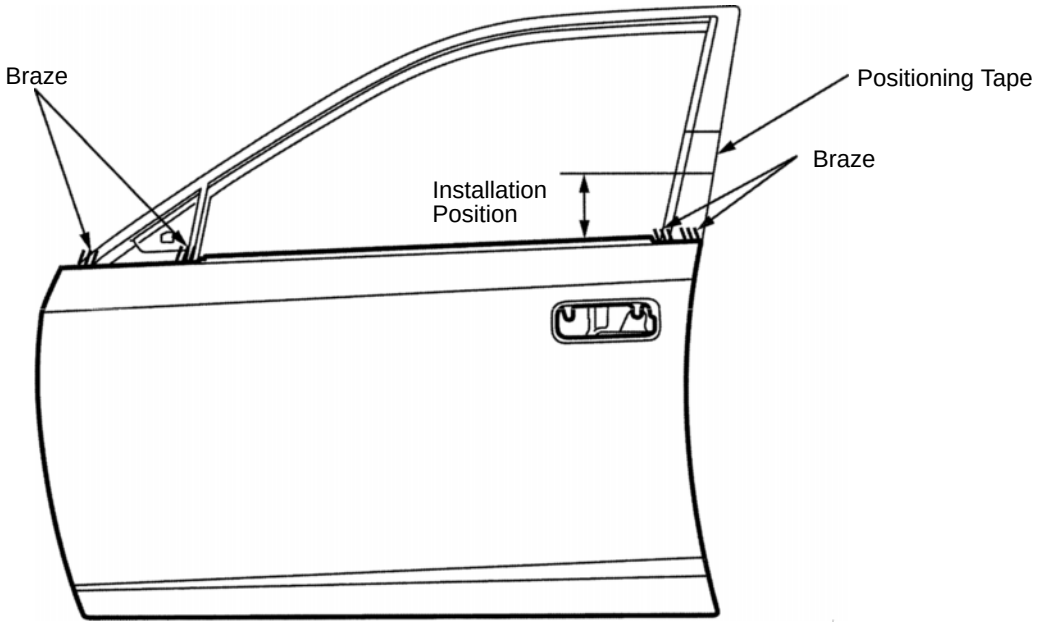

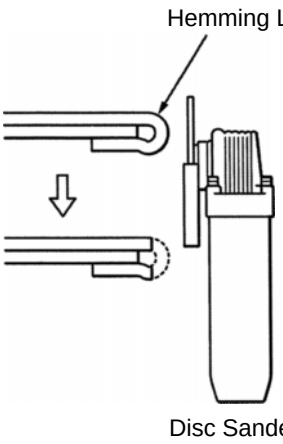

F10171

2. INSTALL FRONT DOOR OUTER PANEL

(a) Before temporarily installing the new parts, apply body sealer to the reinforcement, side impact protection beam and back side of the new parts.

HINT:

- *Apply just enough sealer for the reinforcement and side impact beam to touch the new panel. Apply sealer evenly around the flange area, about 10 mm (0.39 in.) from the edge, as shown.*
- *For other sealing points, refer to section PC.*

(b) Bend the flange hem about 30˚ with a hammer and dolly, then fasten tightly with a hemming tool.

HINT:

- *Perform hemming in three steps, being careful not to warp the panel.*
- *If a hemming tool cannot be used, hem with a hammer and dolly.*

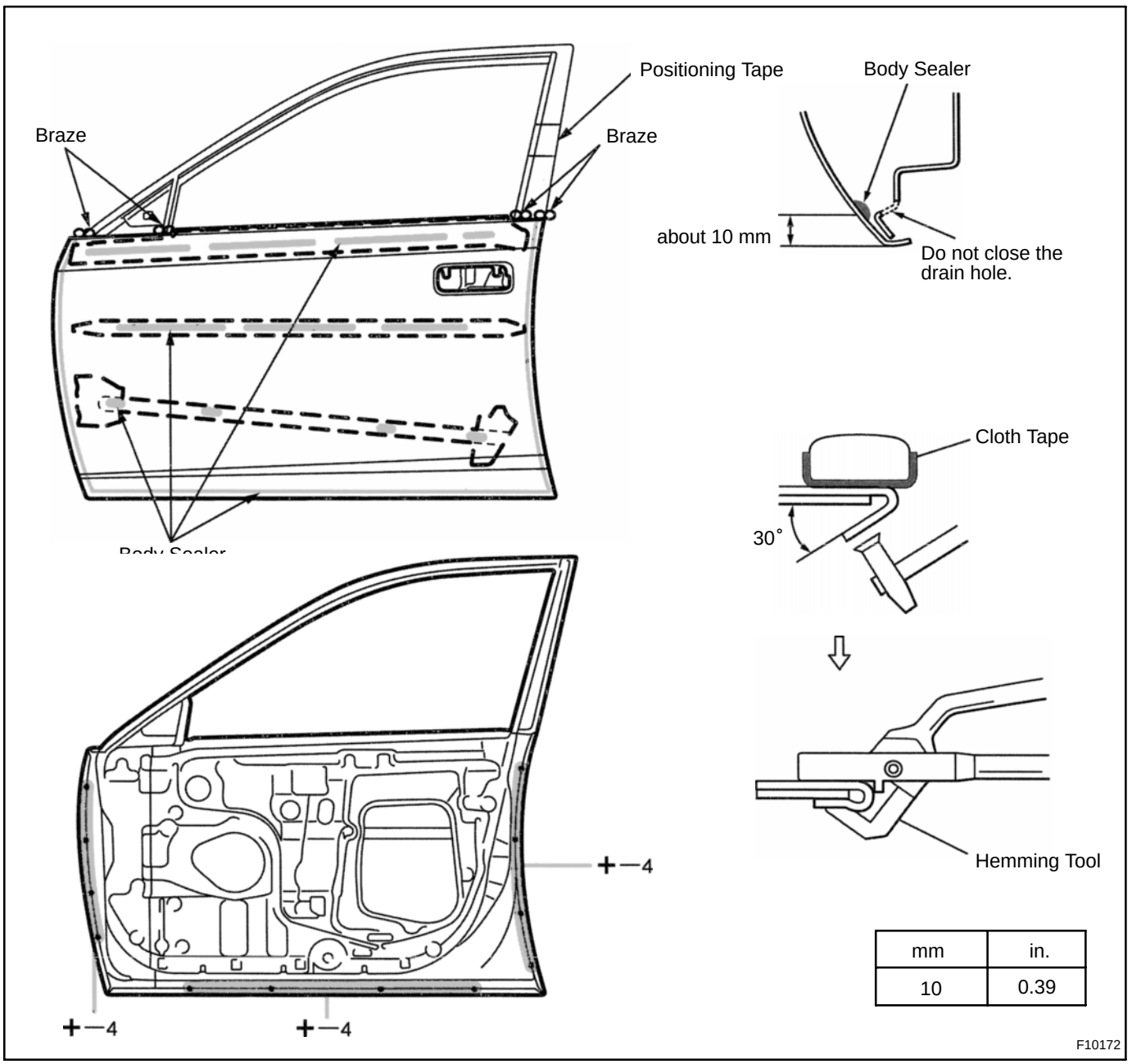

mm	in.
10	0.39

3. APPLYING SEALER TO THE DOOR PARTS (See page PC-1)

4. APPLYING ANTI-RUST AGENT

(a) After applying the top coat layer, apply the anti-rust agent to the inside of the necked section structural weld spots.

FRONT FENDER FRONT APRON (ASSY)

REPLACEMENT

1. **REMOVE RADIATOR UPPER SUPPORT (See page BP-1)**
2. **REMOVE FRONT FENDER FRONT APRON**

(a) Replace the fender apron plate at the same time.

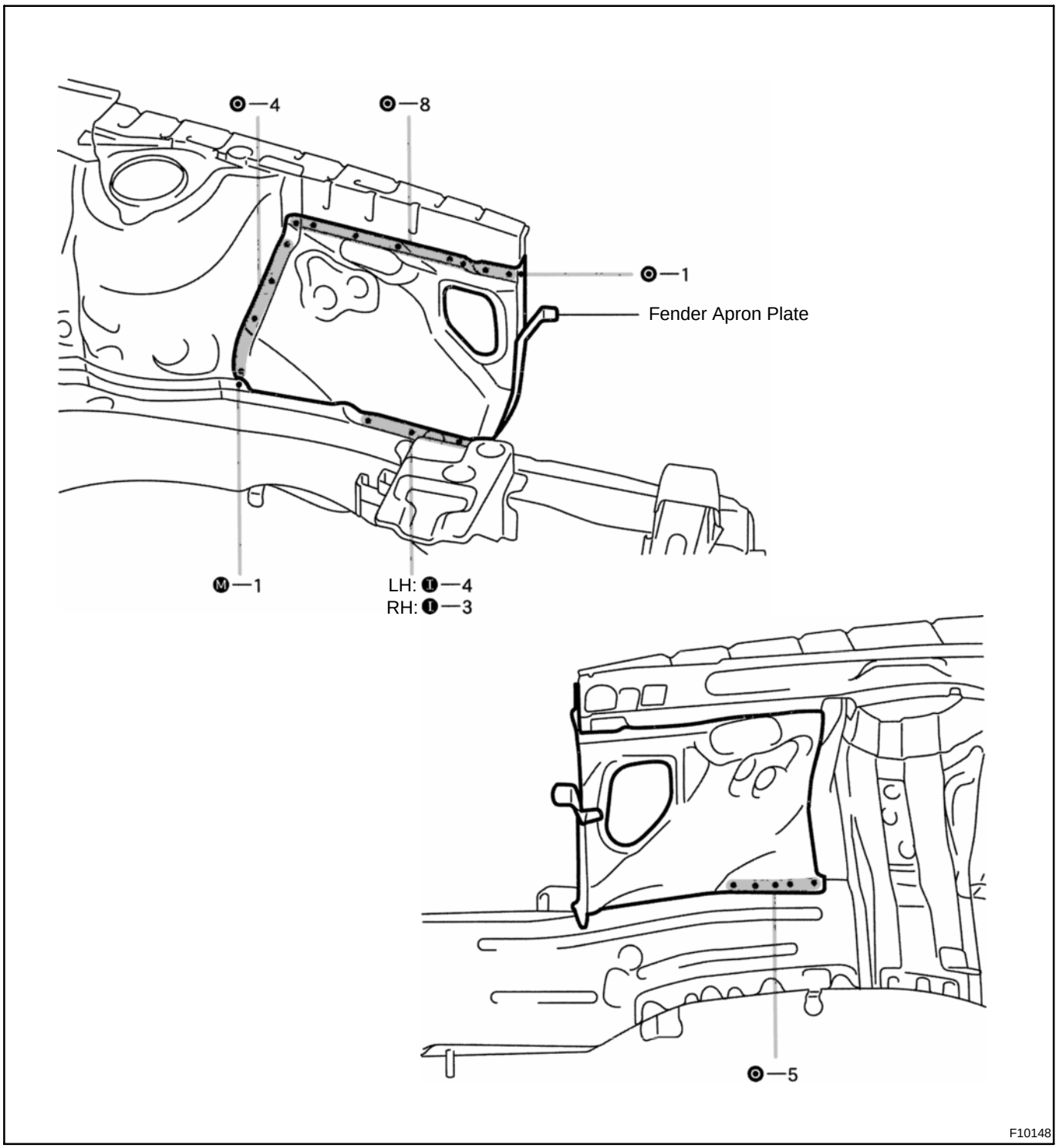

3. INSTALL FRONT FENDER FRONT APRON

(a) Temporarily install the new parts and measure each part in accordance with the body dimension diagram.

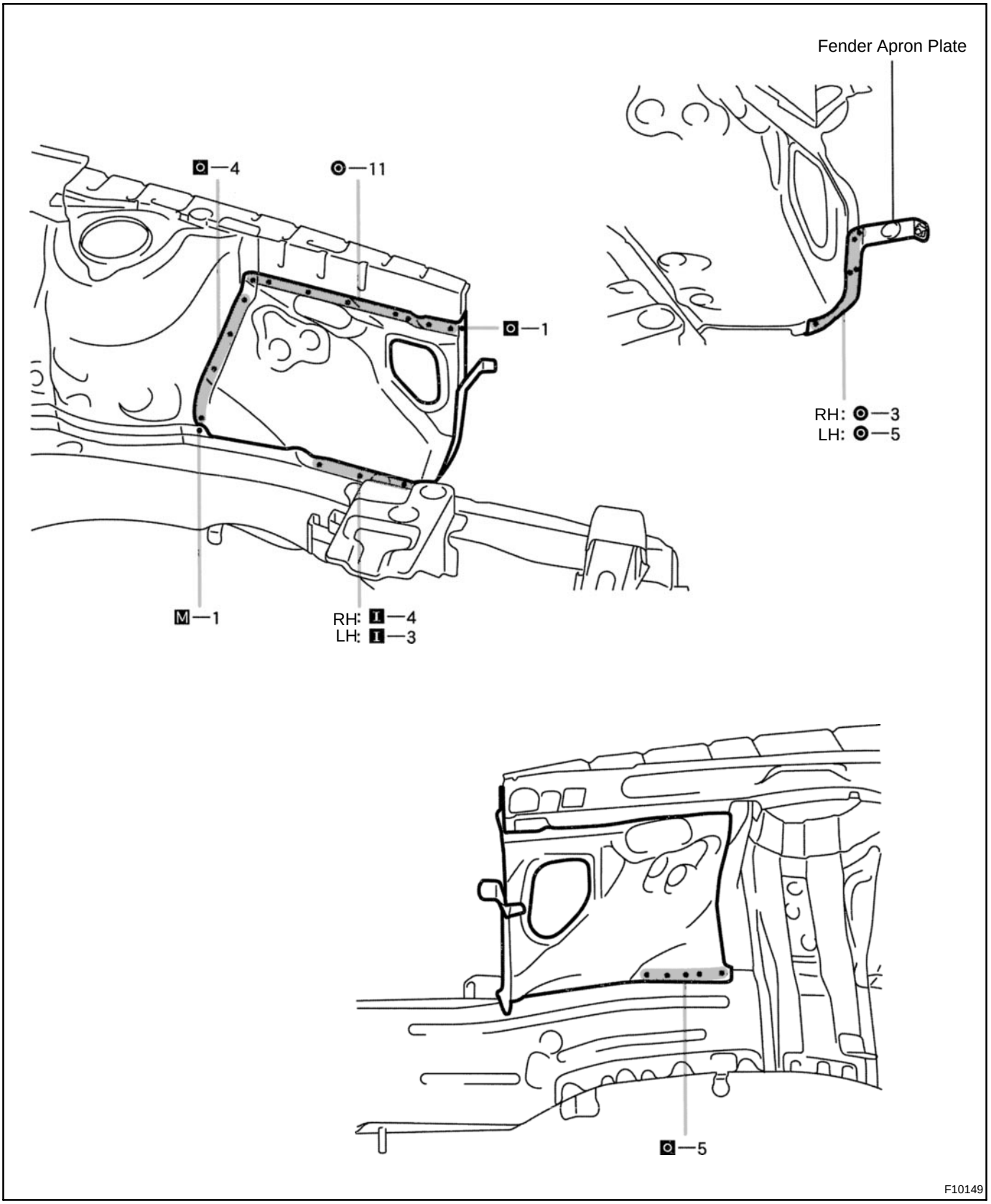

4. MEASURING THE ENGINE COMPARTMENT DIMENSIONS (See page BP-81)

5. INSTALL RADIATOR UPPER SUPPORT (See page BP-1)

6. APPLYING SEALER TO THE ENGINE COMPARTMENT (See page PC-1)

7. APPLYING UNDERCOATING (See page PC-6)

8. APPLYING ANTI-RUST AGENT

(a) After applying the top coat layer, apply the anti-rust agent to the inside of the necked section structural weld spots.

FRONT SIDE MEMBER (CUT-P)
REPLACEMENT

1. **REMOVE RADIATOR UPPER SUPPORT (See page BP-1)**
2. **REMOVE FRONT CROSSMEMBER SIDE GUSSET (See page BP-3)**
3. **REMOVE FRONT CROSSMEMBER (See page BP-5)**
4. **REMOVE FRONT SIDE MEMBER**

(a) Cut and join the parts at the locations as shown below.

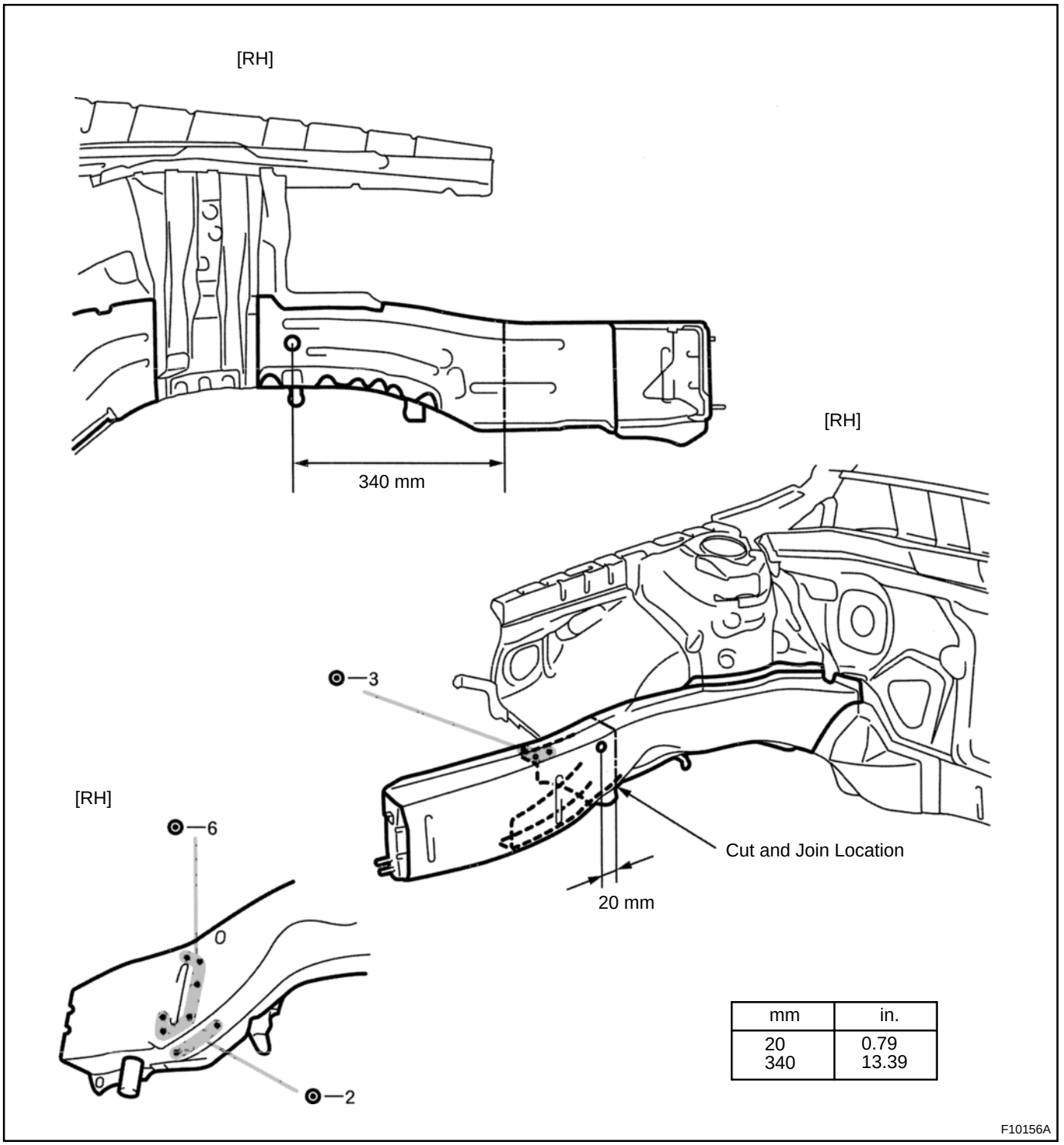

mm	in.
20	0.79
340	13.39

F10156A

(b) LH only: After removing the battery carrier support, cut and join the front side member.

HINT:

Leave the reinforcement to the vehicle side.

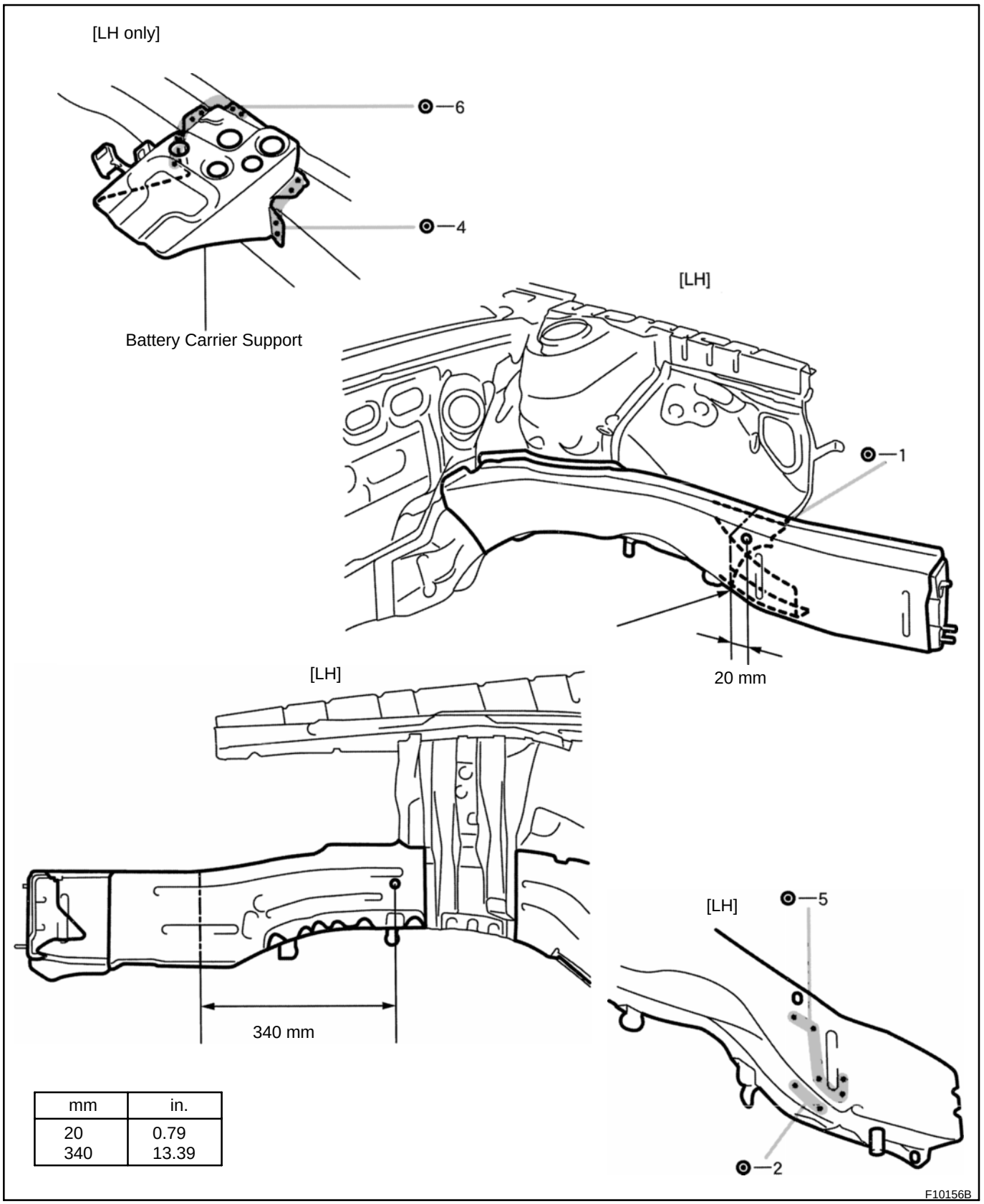

mm	in.
20	0.79
340	13.39

5. INSTALL FRONT SIDE MEMBER

(a) Temporarily install the new parts and measure each part in accordance with the body dimension diagram.

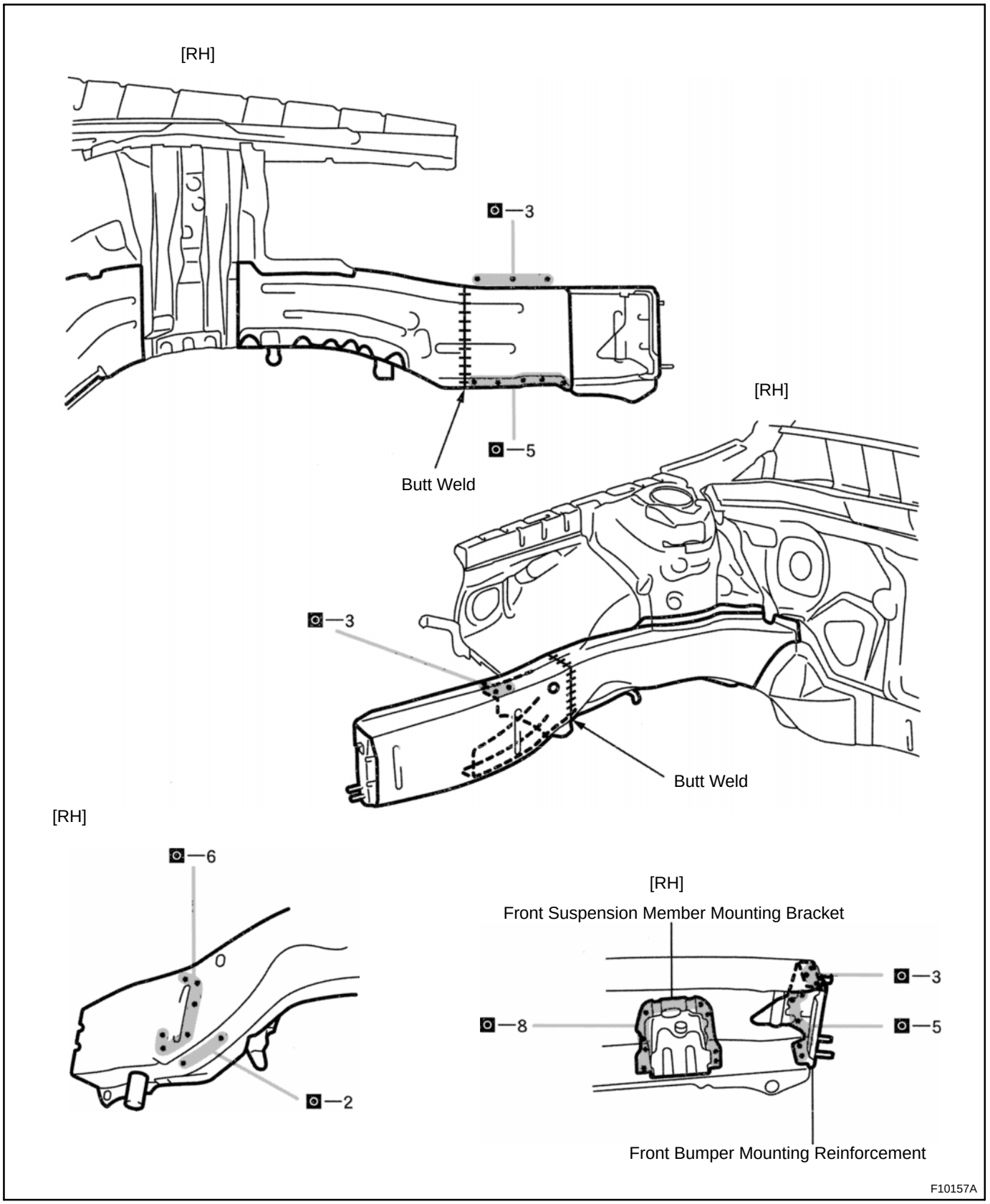

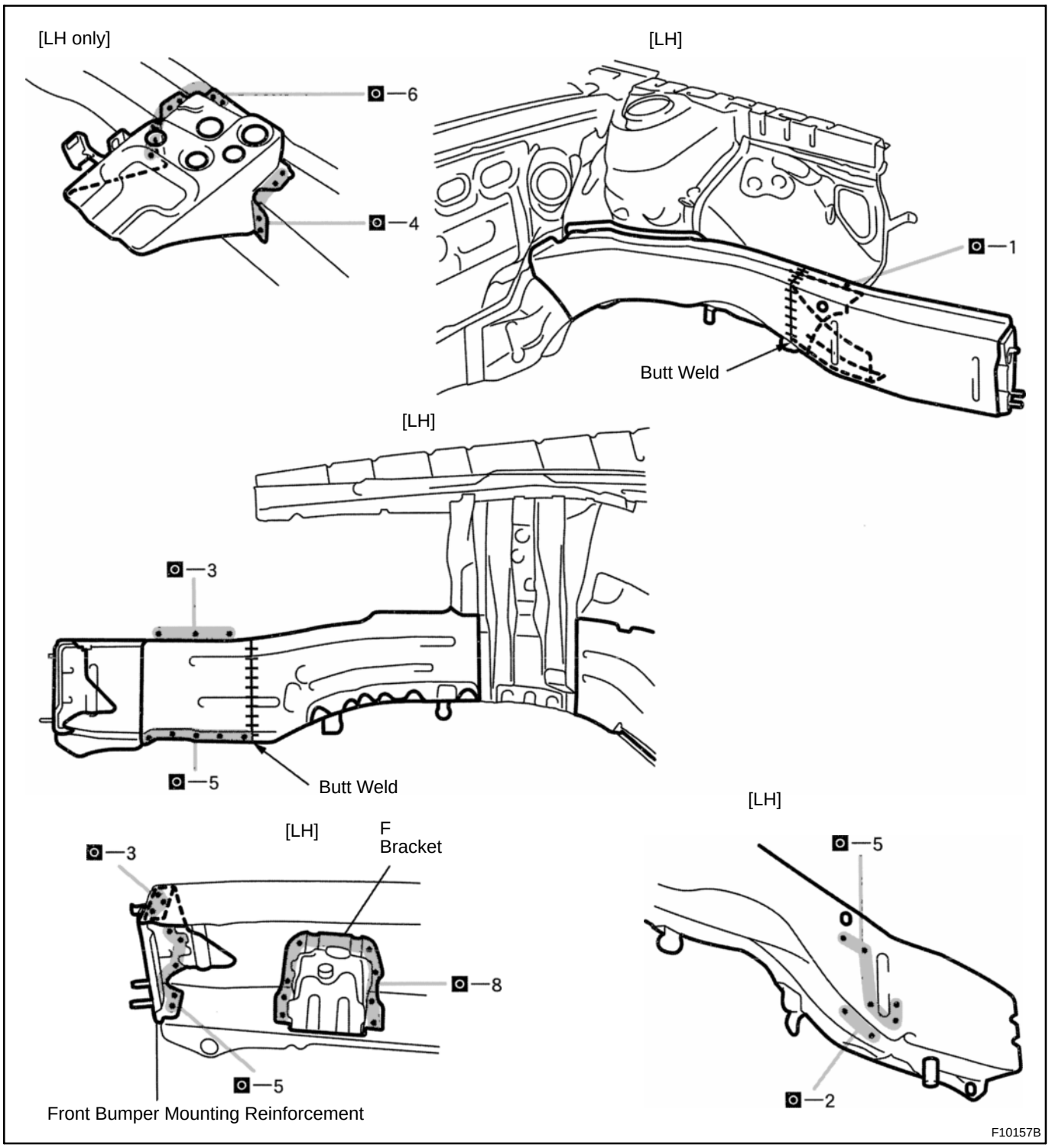

6. **MEASURING THE ENGINE COMPARTMENT DIMENSIONS (See page BP-81)**
7. **MEASURING THE UNDER BODY DIMENSIONS (See page BP-85)**
8. **INSTALL FRONT CROSSMEMBER (See page BP-5)**
9. **INSTALL FRONT CROSSMEMBER SIDE GUSSET (See page BP-3)**
10. **INSTALL RADIATOR UPPER SUPPORT (See page BP-1)**
11. **APPLYING SEALER TO THE ENGINE COMPARTMENT (See page PC-1)**
12. **APPLYING ANTI-RUST AGENT (See page PC-7)**

(a) After applying the top coat layer, apply the anti-rust agent to the inside of the necked section structural weld spots.

LUGGAGE COMPARTMENT OPENING TROUGH (ASSY)

REPLACEMENT

1. REMOVE LUGGAGE COMPARTMENT OPENING TROUGH

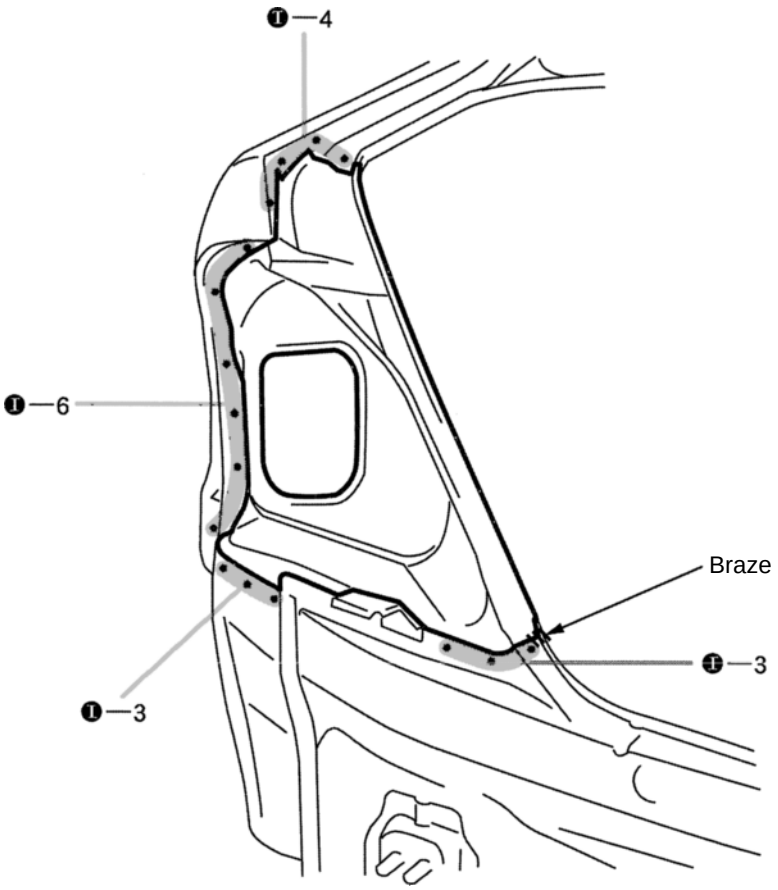

F10189

2. INSTALL LUGGAGE COMPARTMENT OPENING TROUGH

HINT:
Inspect the fitting of the luggage compartment door and rear combination light, etc., before welding, since this affects the appearance of the finish.

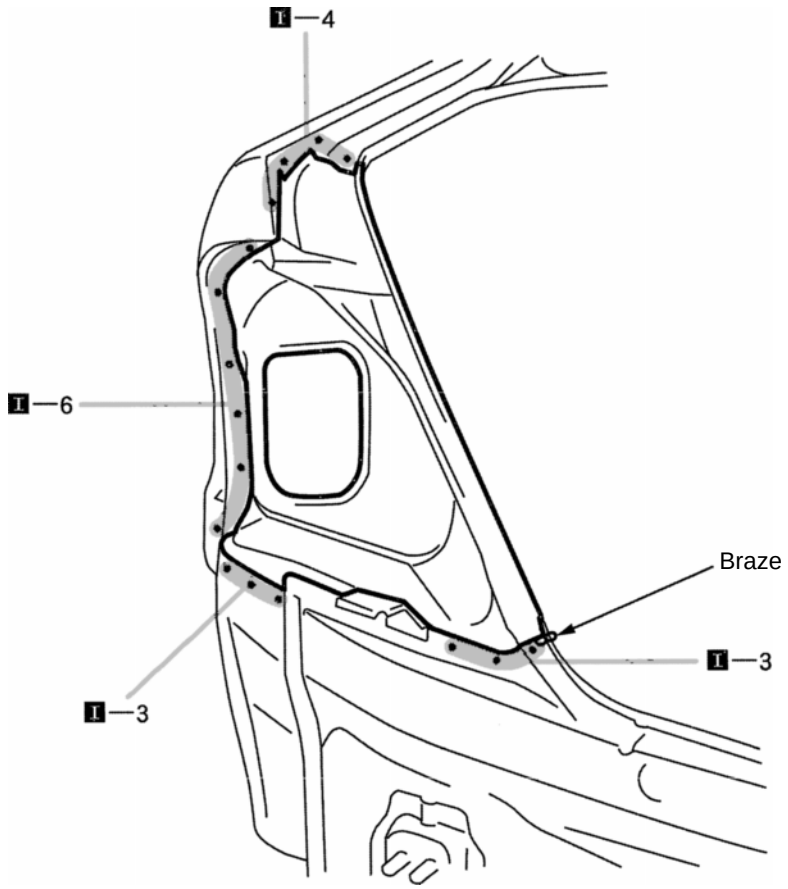

F10190

3. APPLYING SEALER TO THE INSIDE OF THE VEHICLE (See page PC-1)

4. APPLYING SEALER TO THE REAR LUGGAGE COMPARTMENT (See page PC-1)

5. APPLYING ANTI-RUST AGENT

(a) After applying the top coat layer, apply the anti-rust agent to the inside of the necked section structural weld spots.

QUARTER WHEEL HOUSING OUTER PANEL (ASSY): Left Side

REPLACEMENT

1. **REMOVE QUARTER PANEL (See page BP-49)**
2. **REMOVE ROCKER OUTER EXTENSION (See page BP-47)**
3. **REMOVE QUARTER WHEEL HOUSING OUTER PANEL**

(a) Remove the roof side outer panel at the location shown in the below figure and remove the quarter wheel housing outer panel.

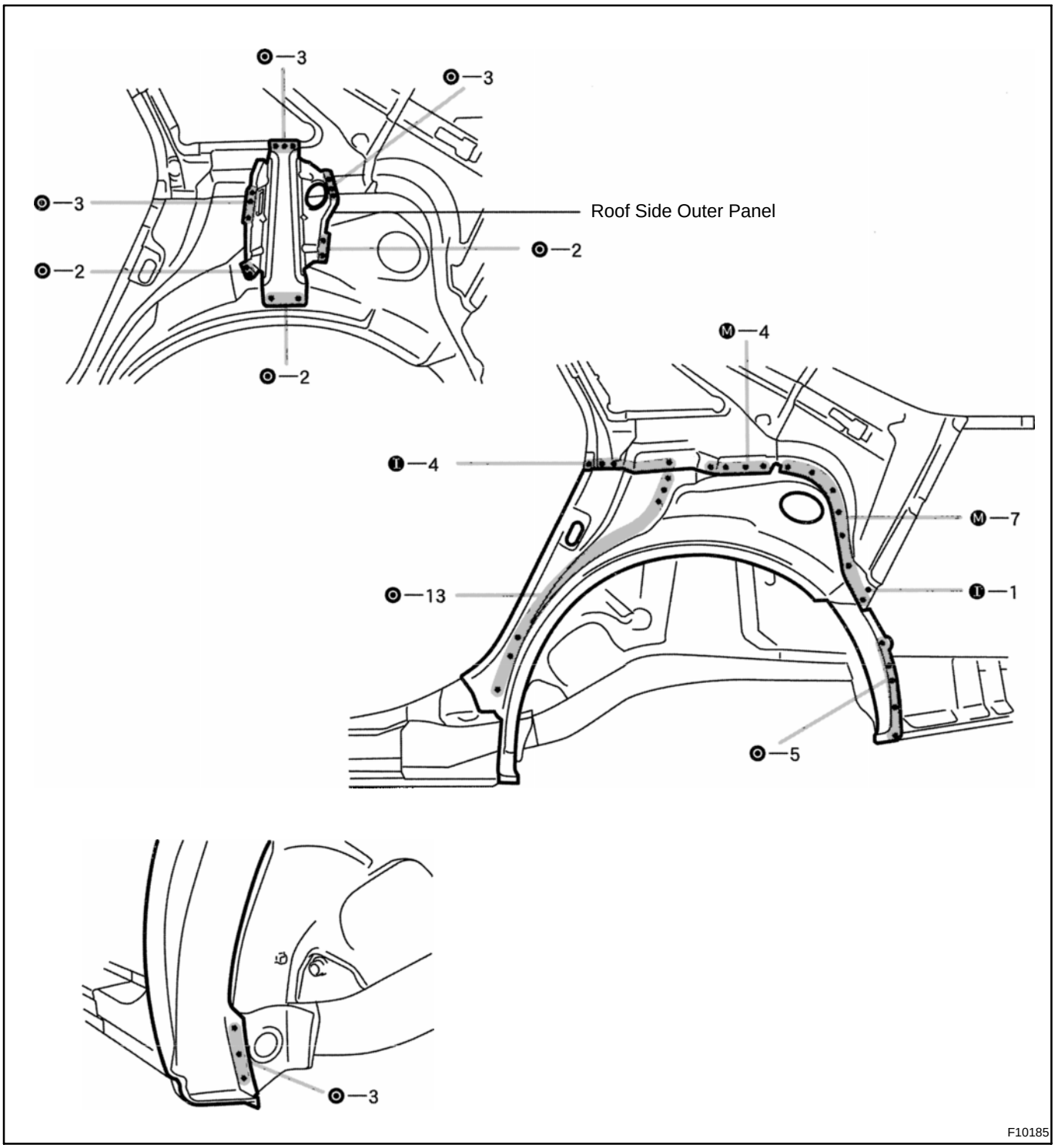

4. INSTALL QUARTER WHEEL HOUSING OUTER PANEL

HINT:
Temporarily install the quarter panel and inspect the fitting before welding, since this affects the appearance of the finish.

(a) Determine the position of the new parts by the assembly marks of the inner and outer panels.

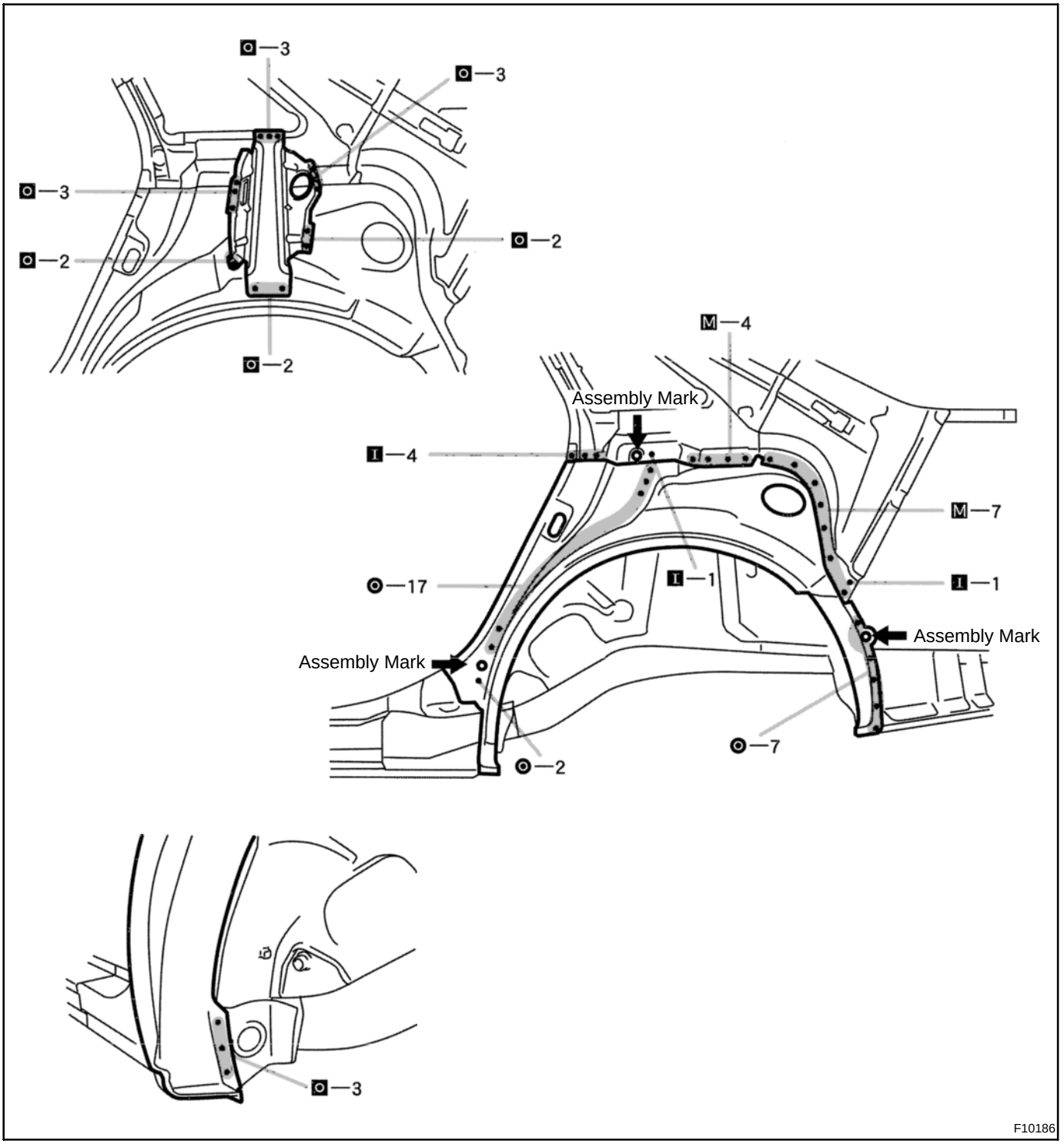

5. INSTALL ROCKER OUTER EXTENSION (See page BP-47)

6. INSTALL QUARTER PANEL (See page BP-49)

7. APPLYING SEALER TO THE INSIDE OF THE VEHICLE (See page PC-1)

8. APPLYING SEALER TO THE REAR LUGGAGE COMPARTMENT (See page PC-1)

9. APPLYING UNDER COATING (See page PC-6)

10. CHARGING THE POLYURETHANE FOAM (See page PC-6)

11. APPLYING ANTI-RUST AGENT

(a) After applying the top coat layer, apply the anti-rust agent to the inside of the necked section structural weld spots.

QUARTER PANEL (CUT)

REPLACEMENT

1. REMOVE QUARTER PANEL

(a) Cut and join the parts at the locations as shown below.

(b) Replace the fuel filler opening lid at the same time.

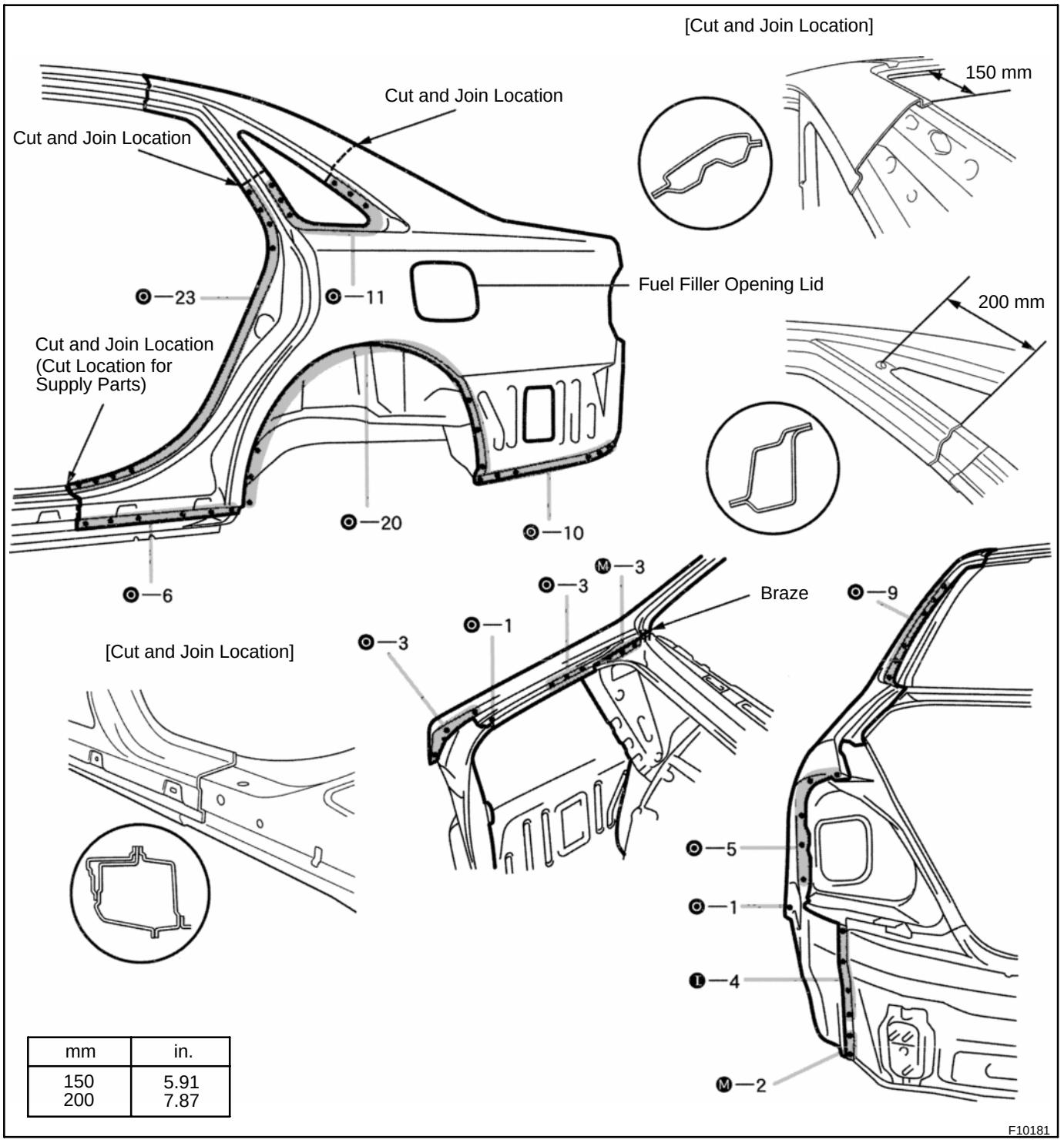

mm	in.
150	5.91
200	7.87

2. INSTALL QUARTER PANEL

HINT: Inspect the fitting of the rear door, luggage compartment door and rear combination light, etc., before welding, since this affects the appearance of the finish.

(a) Before temporarily installing the new parts, weld the quarter lock pillar reinforcement with standard points.

(b) Before temporarily installing the new parts, apply body sealer to the wheel arch.

HINT:

- *Apply body sealer about 5 mm (0.20 in.) from the flange, avoiding any oozing.*
- *Apply sealer evenly, about 3 - 4 mm (0.12 - 0.16 in.) in diameter.*
- *For other sealing points, refer to section PC.*

(c) Use water proof rivets for the fuel opening lid installation.

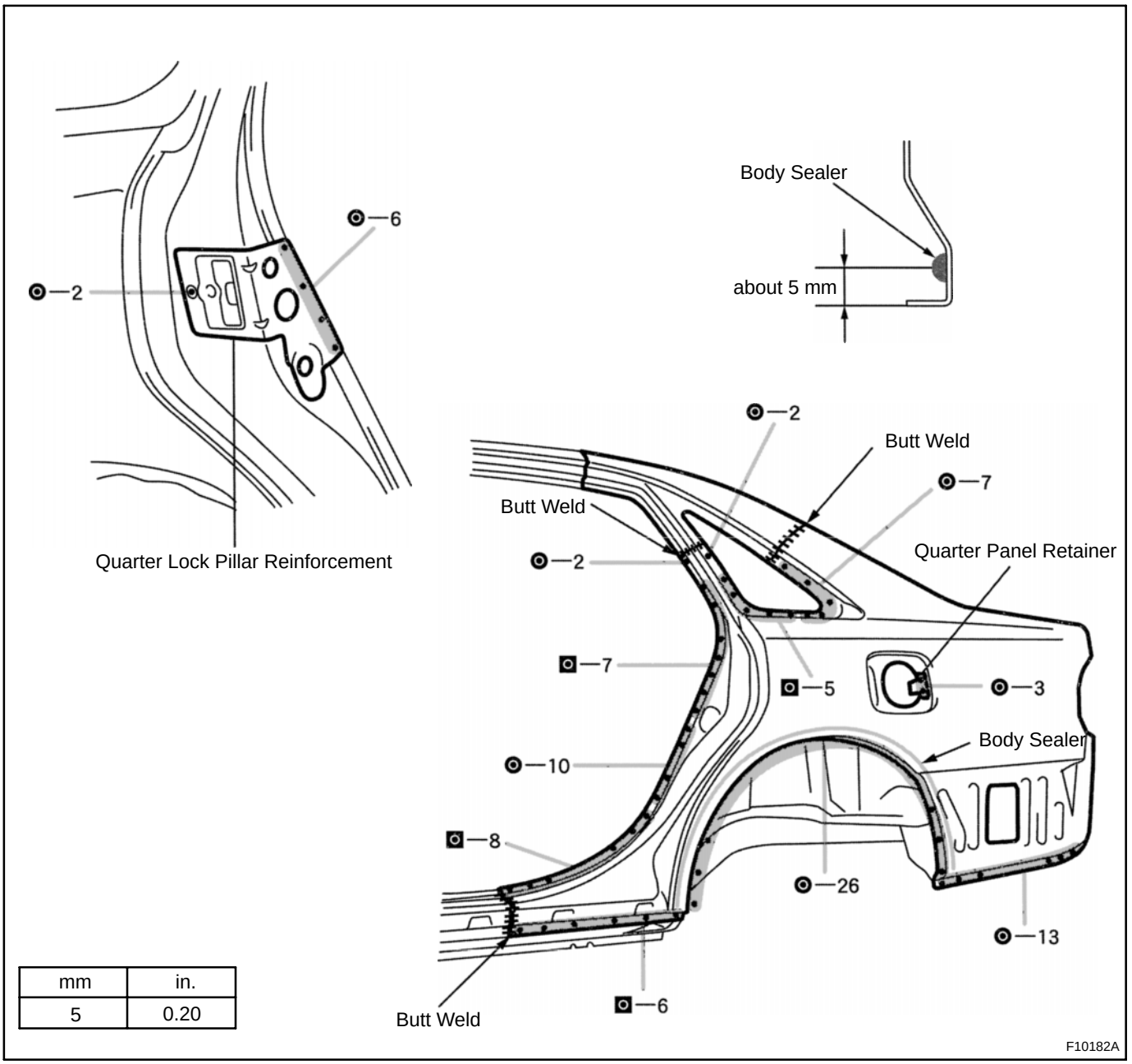

mm	in.
5	0.20

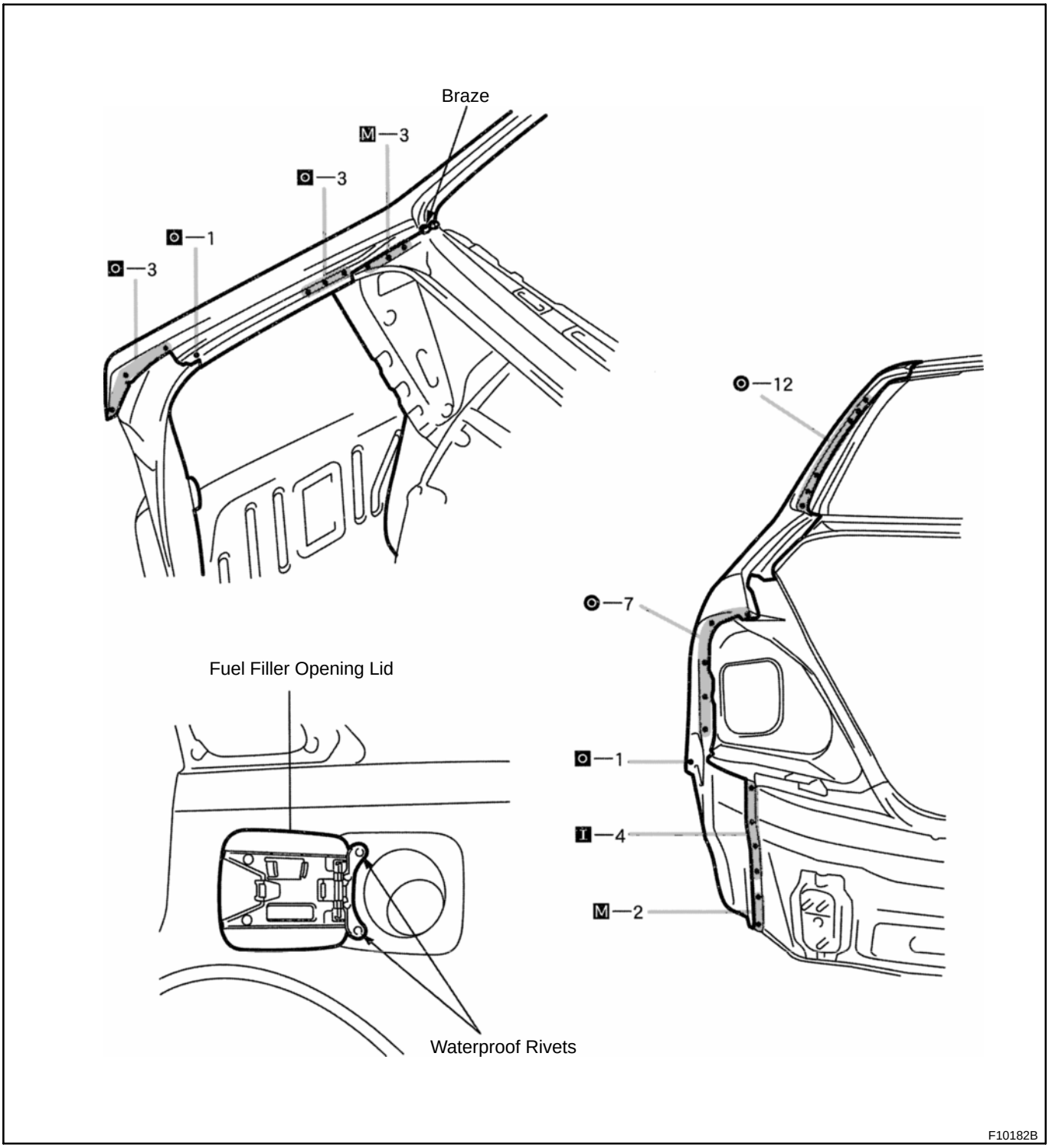

3. **MEASURING THE OPENING PORTION DIMENSIONS (See page BP-84)**
4. **APPLYING SEALER TO THE INSIDE OF THE VEHICLE (See page PC-1)**
5. **APPLYING SEALER TO THE REAR LUGGAGE COMPARTMENT (See page PC-1)**
6. **CHARGING THE POLYURETHANE FOAM (See page PC-8)**
7. **APPLYING ANTI-RUST AGENT**

(a) After applying the top coat layer, apply the anti-rust agent to the inside of the necked section structural weld spots.

QUARTER WHEEL HOUSING OUTER PANEL (ASSY): Right Side

REPLACEMENT

1. **REMOVE QUARTER PANEL (See page BP-49)**
2. **REMOVE ROCKER OUTER EXTENSION (See page BP-47)**
3. **REMOVE QUARTER WHEEL HOUSING OUTER PANEL**

(a) Remove the roof side outer panel at the location shown in below figure and remove the quarter wheel housing outer panel.

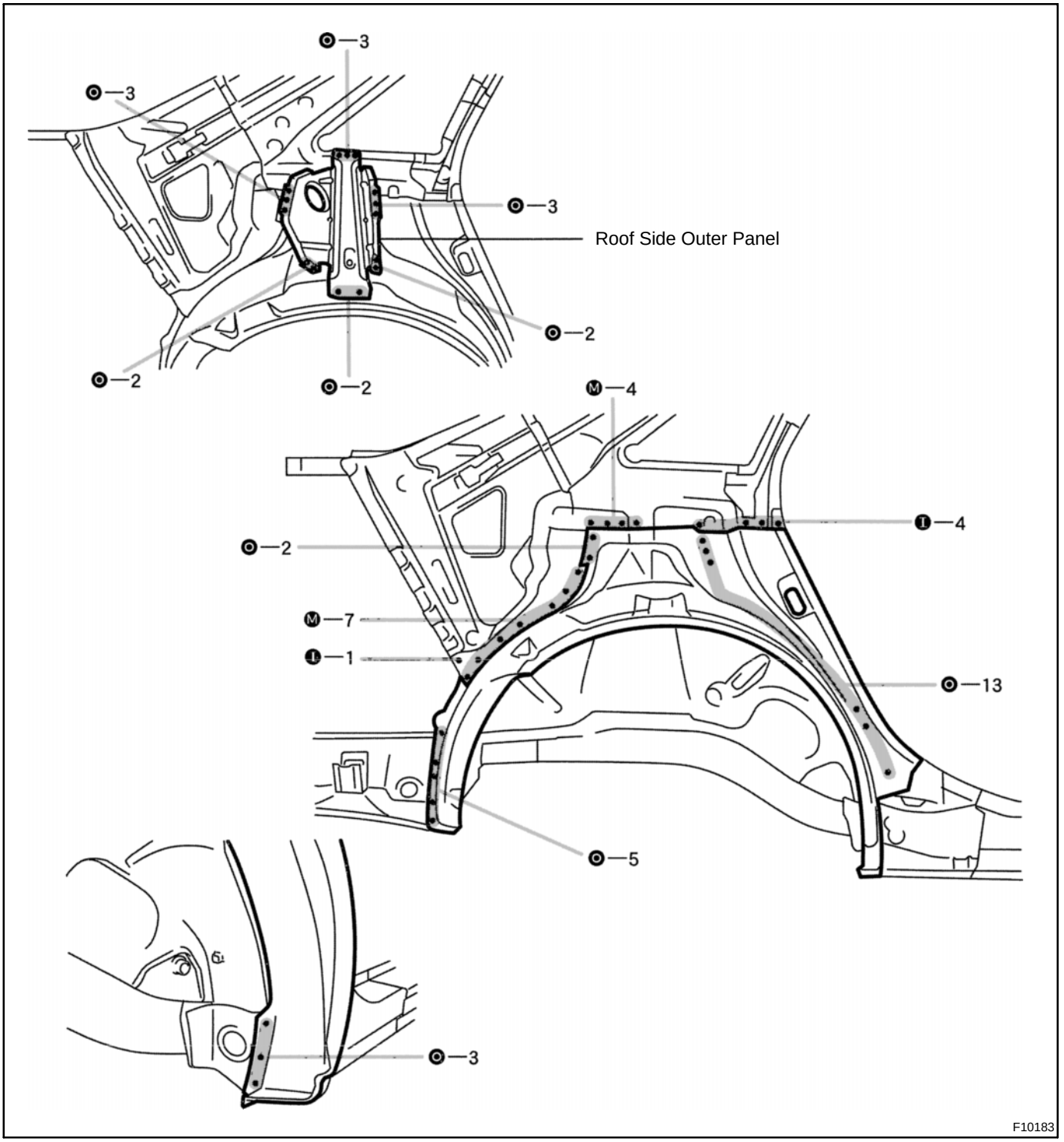

4. INSTALL QUARTER WHEEL HOUSING OUTER PANEL

HINT:
Temporarily install the quarter panel and inspect the fitting before welding, since this affects the appearance of the finish.

(a) Determine the position of the new parts by the assembly marks of the inner and outer panels.

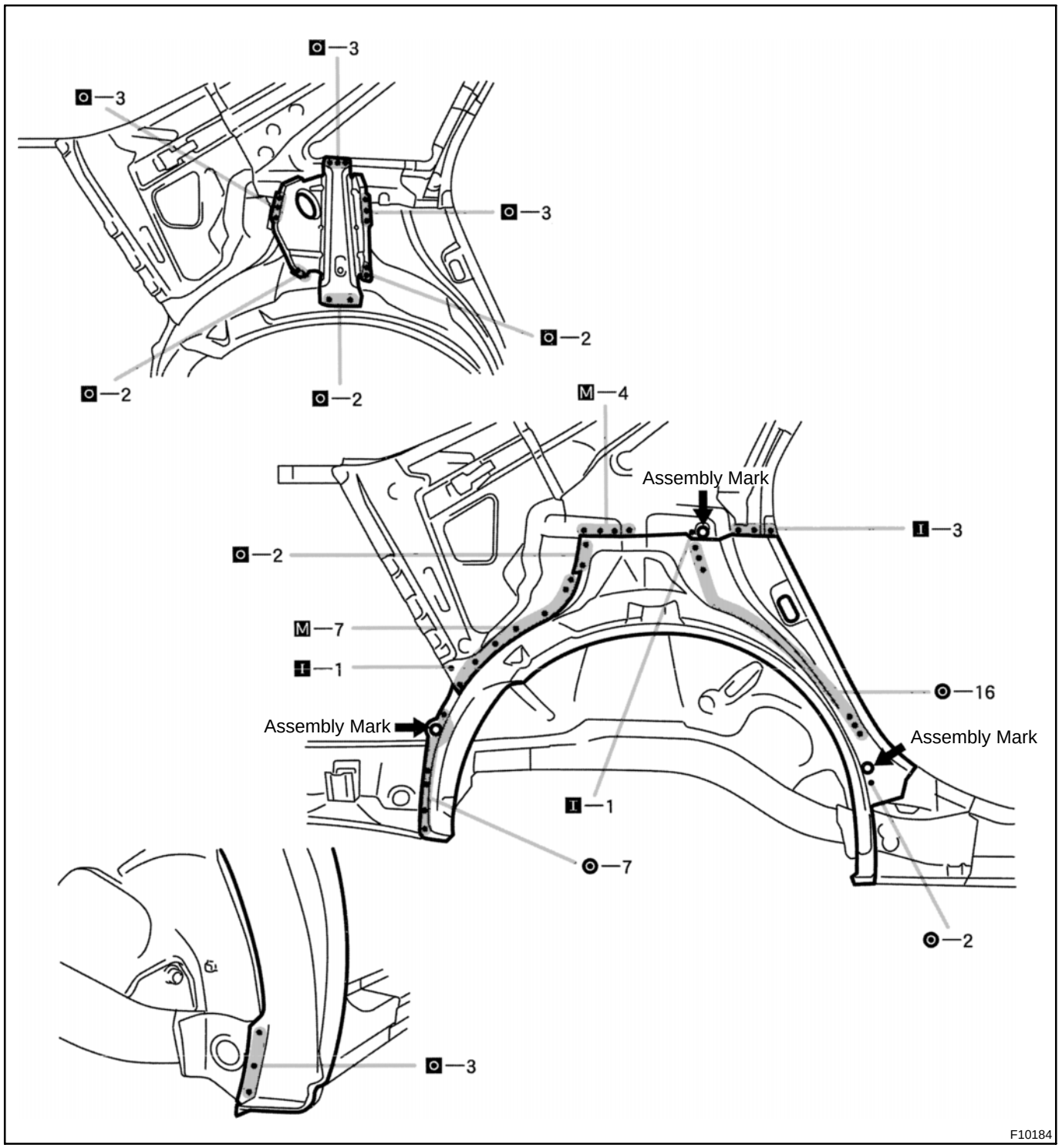

5. INSTALL ROCKER EXTENSION (See page BP-47)

6. INSTALL QUARTER PANEL (See page BP-49)

7. APPLYING SEALER TO THE INSIDE OF THE VEHICLE (See page PC-1)

8. APPLYING SEALER TO THE REAR LUGGAGE COMPARTMENT (See page PC-1)

9. APPLYING UNDER COATING (See page PC-6)

10. CHARGING THE POLYURETHANE FOAM (See page PC-8)

11. APPLYING ANTI-RUST AGENT

(a) After applying the top coat layer, apply the anti-rust agent to the inside of the necked section structural weld spots.

RADIATOR SUPPORT (ASSY)

REPLACEMENT

1. REMOVE RADIATOR SUPPORT

(a) After removing the front side member extension, remove the radiator support.

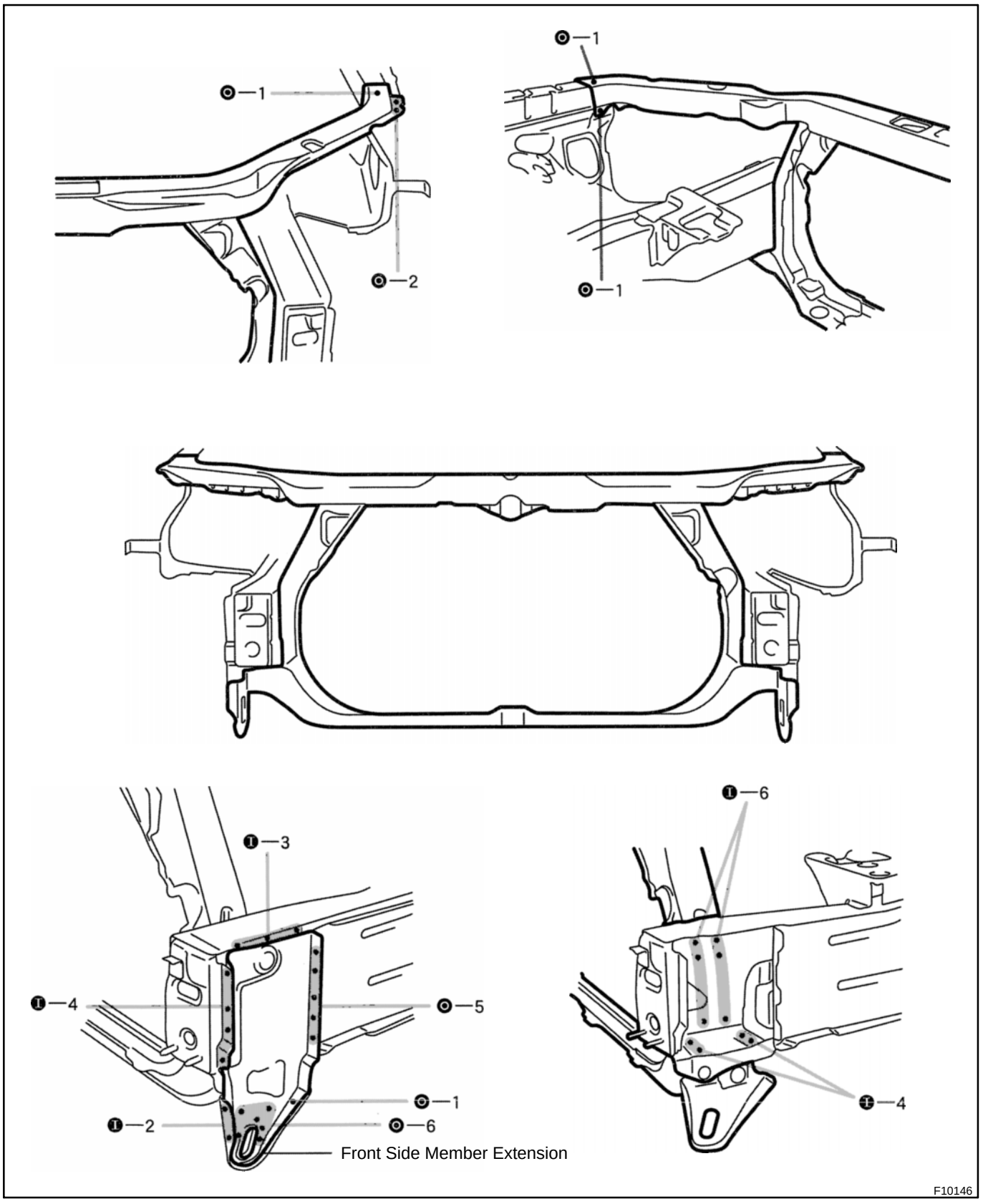

2. INSTALL RADIATOR SUPPORT

(a) Temporarily install the new parts and measure each part in accordance with the body dimension diagram.

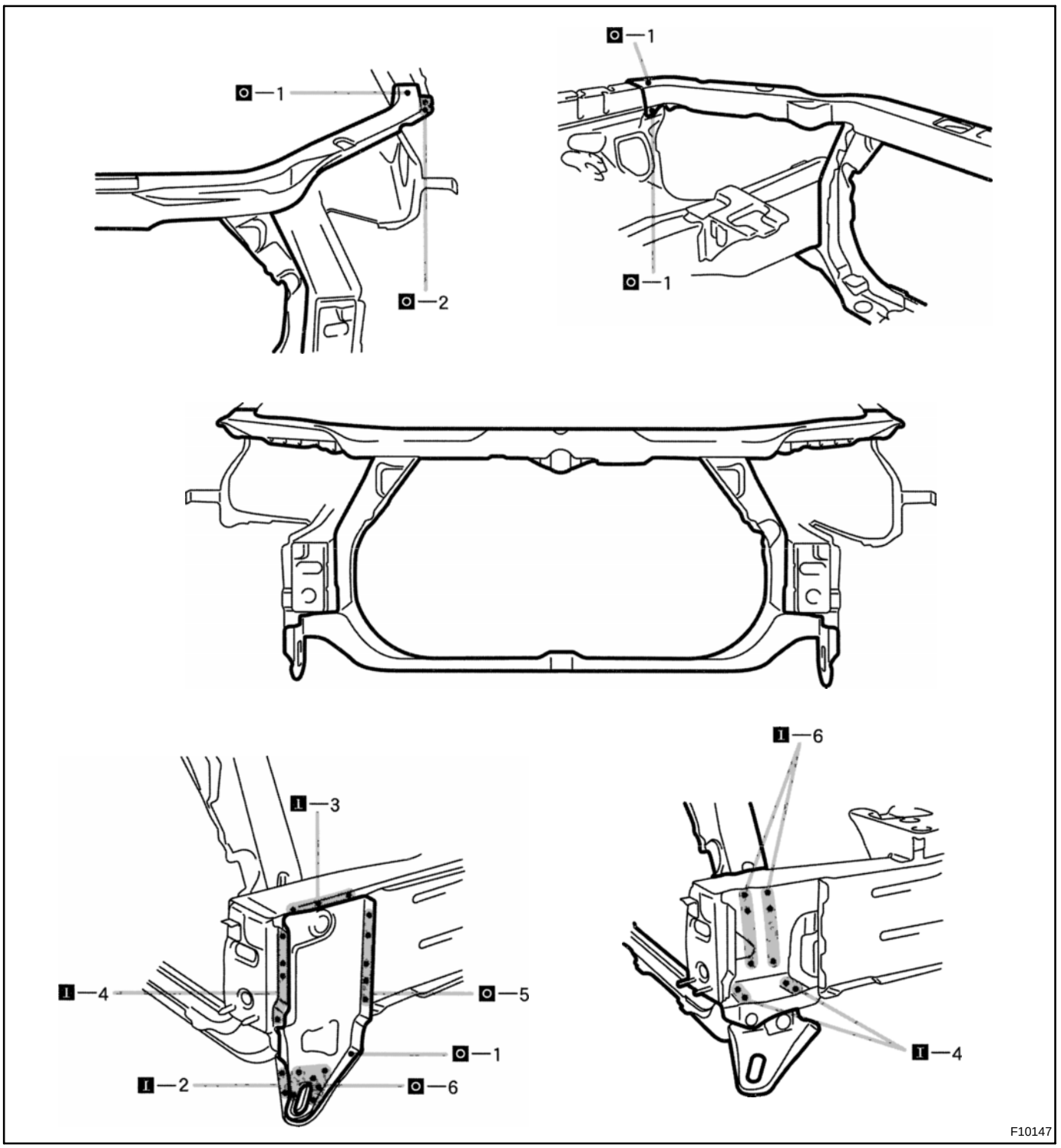

3. MEASURING THE ENGINE COMPARTMENT DIMENSIONS (See page BP-81)

4. MEASURING THE UNDER BODY DIMENSIONS (See page BP-85)

5. APPLYING SEALER TO THE ENGINE COMPARTMENT (See page PC-1)

6. APPLYING ANTI-RUST AGENT

(a) After applying the top coat layer, apply the anti-rust agent to the inside of the necked section structural weld spots.

RADIATOR UPPER SUPPORT (ASSY)

REPLACEMENT

1. REMOVE RADIATOR UPPER SUPPORT

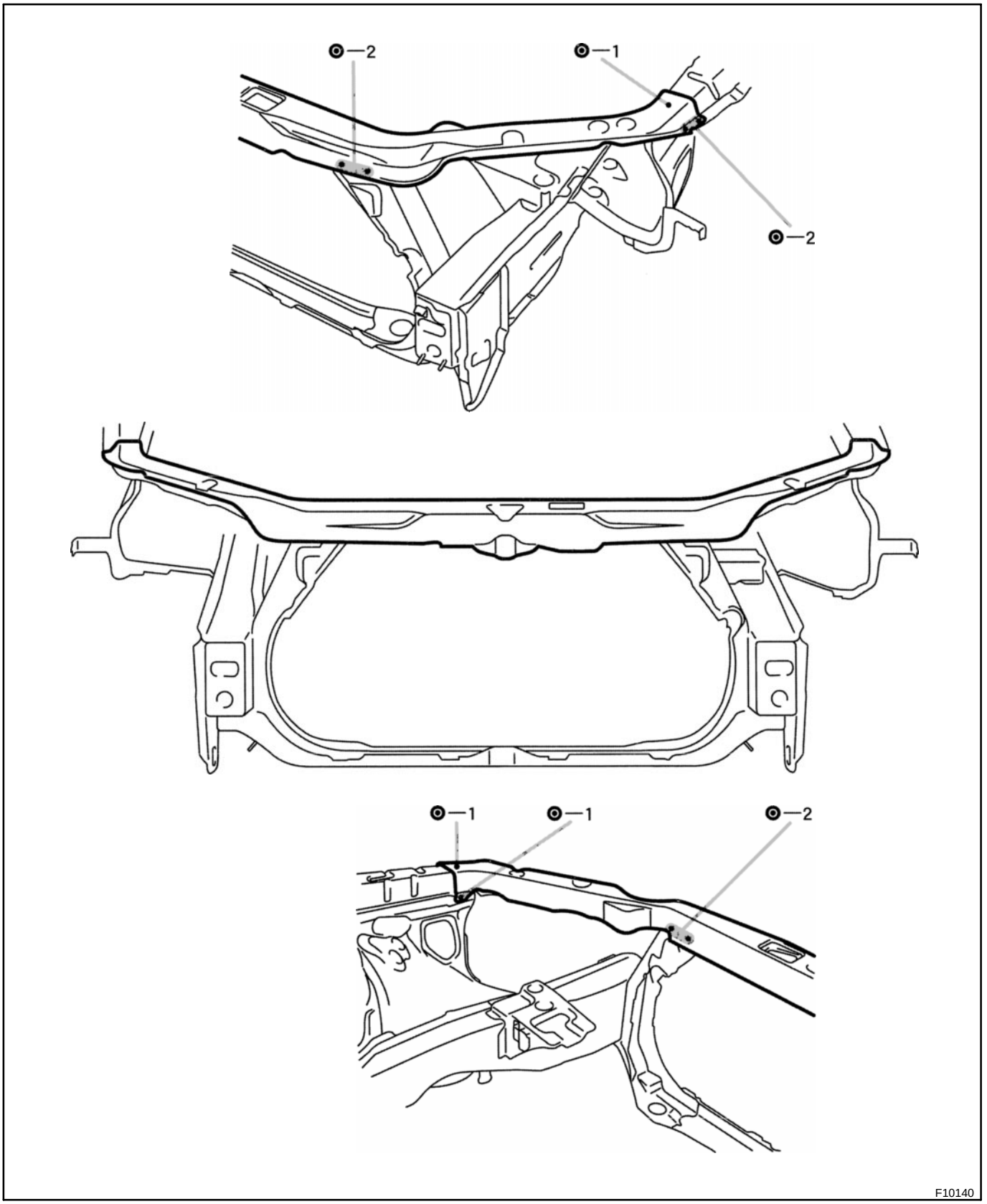

2. INSTALL RADIATOR UPPER SUPPORT

(a) Temporarily install the new parts and measure each part in accordance with the body dimension diagram.

HINT:
First install the hood lock support.

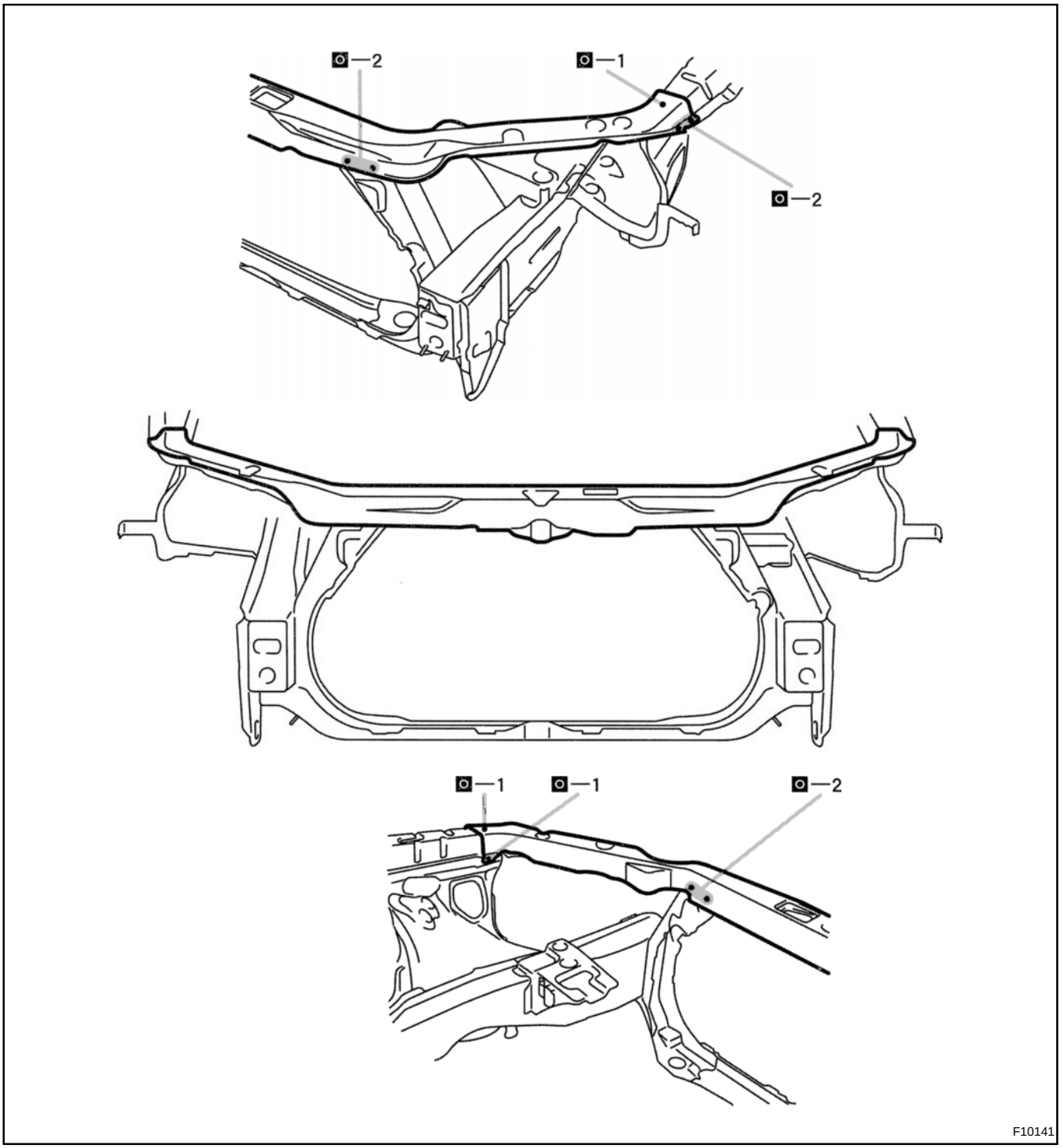

3. MEASURING THE ENGINE COMPARTMENT DIMENSIONS (See page BP-81)

4. APPLYING SEALER TO THE ENGINE COMPARTMENT (See page PC-1)

5. APPLYING ANTI-RUST AGENT

(a) After applying the top coat layer, apply the anti-rust agent to the inside of the necked section structural weld spots.

REAR DOOR OUTER PANEL (ASSY)

REPLACEMENT

1. REMOVE REAR DOOR OUTER PANEL

(a) Before removing the outer panel, make the installation position with a tape.

(b) After grinding off the hemming location, remove the outer panel.

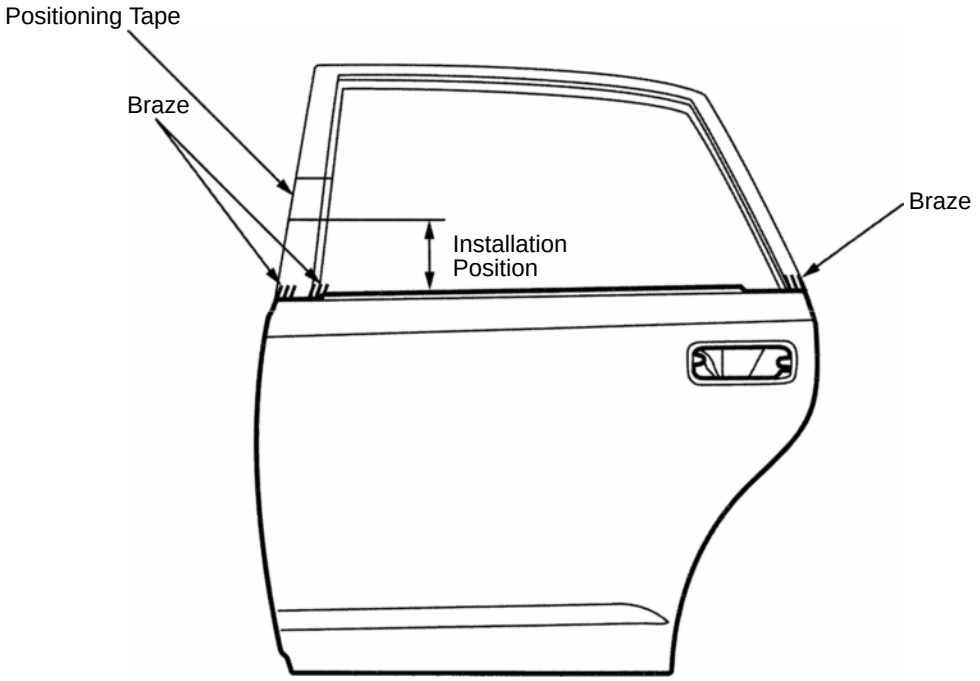

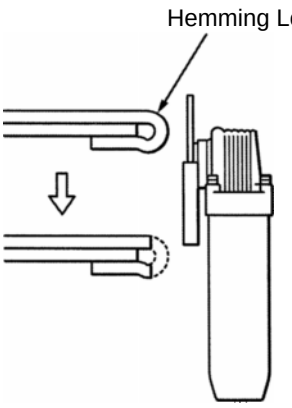

F10173

2. INSTALL FRONT DOOR OUTER PANEL

(a) Before temporarily installing the new parts, apply body sealer to the reinforcement, side impact protection beam and back side of the new parts.

HINT:

- *Apply just enough sealer for the reinforcement and side impact beam to touch the new panel. Apply sealer evenly around the flange area, about 10 mm (0.39 in.) from the edge, as shown.*
- *For other sealing points, refer to section PC.*

(b) Bend the flange hem about 30˚ with a hammer and dolly, then fasten tightly with a hemming tool.

HINT:

- *Perform hemming in three steps, being careful not to warp the panel.*
- *If a hemming tool cannot be used, hem with a hammer and dolly.*

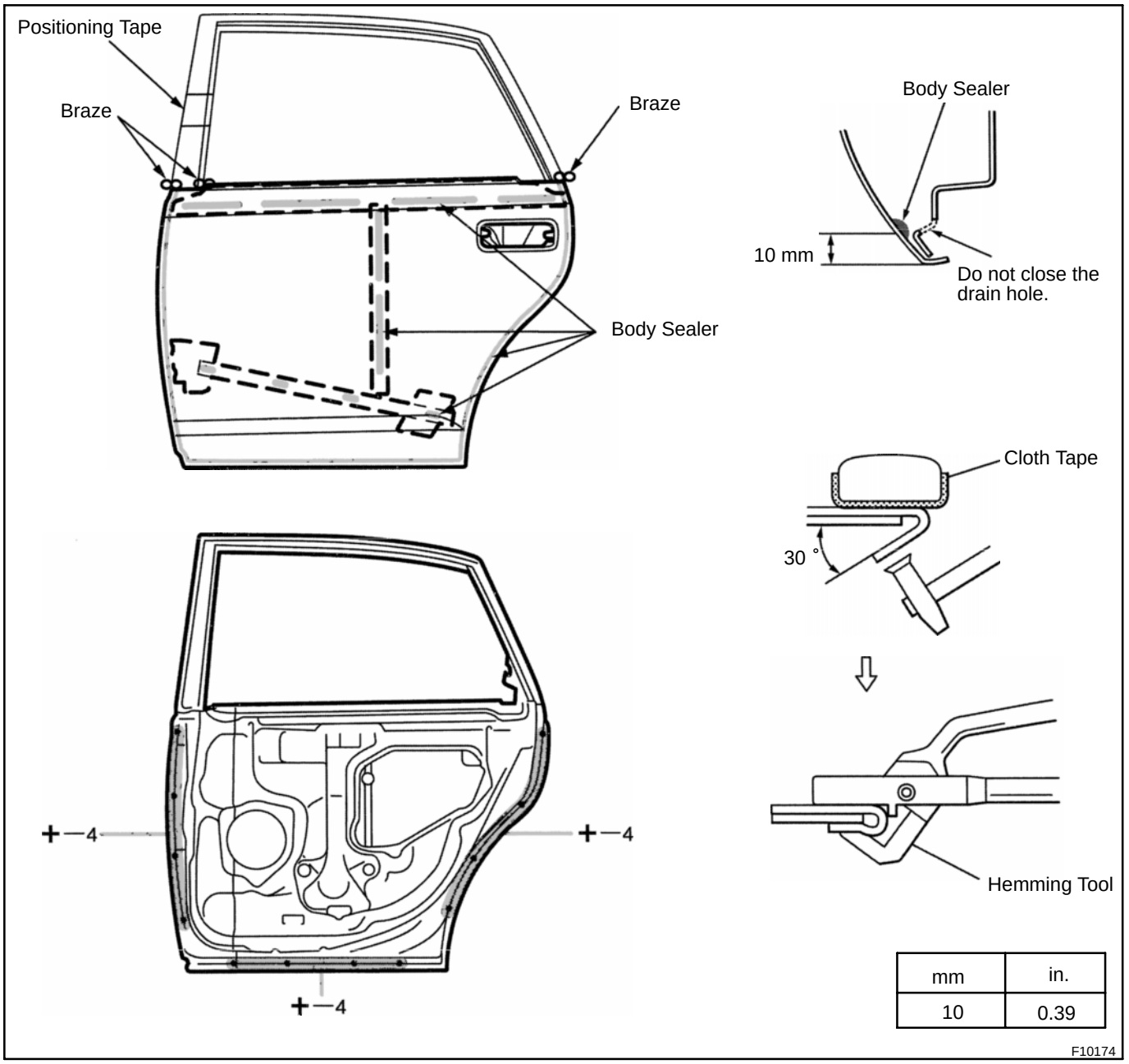

3. APPLYING SEALER TO THE DOOR PARTS (See page PC-1)

4. APPLYING ANTI-RUST AGENT

(a) After applying the top coat layer, apply the anti-rust agent to the inside of the necked section structural weld spots.

REAR FLOOR PAN (ASSY)

REPLACEMENT

1. **REMOVE BODY LOWER BACK PANEL (See page BP-58)**
2. **REMOVE REAR FLOOR NO. 3 CROSSMEMBER (See page BP-62)**
3. **REMOVE REAR FLOOR PAN**

(a) After removing the rear floor pan reinforcement, remove the rear floor pan.

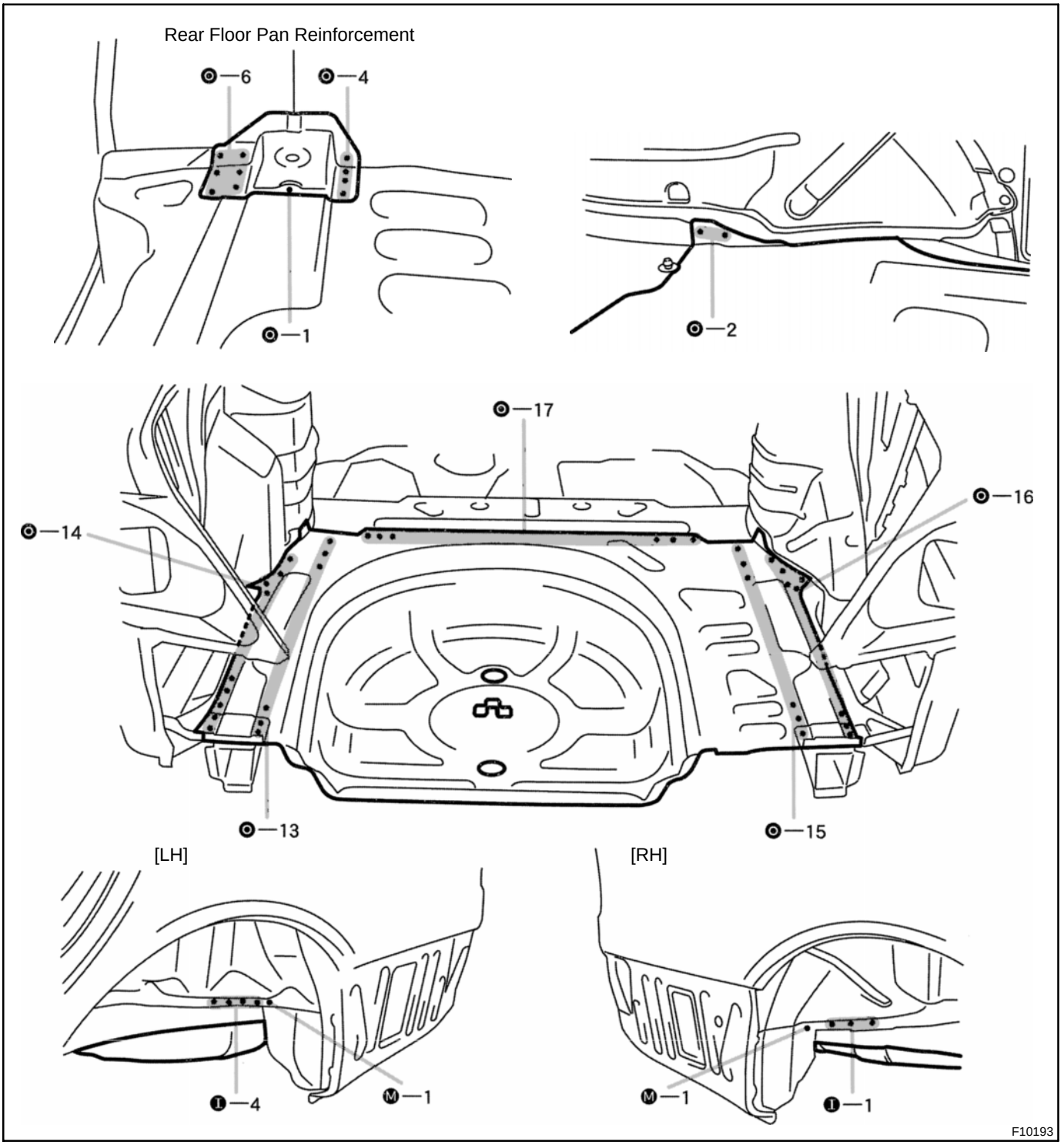

4. INSTALL REAR FLOOR PAN

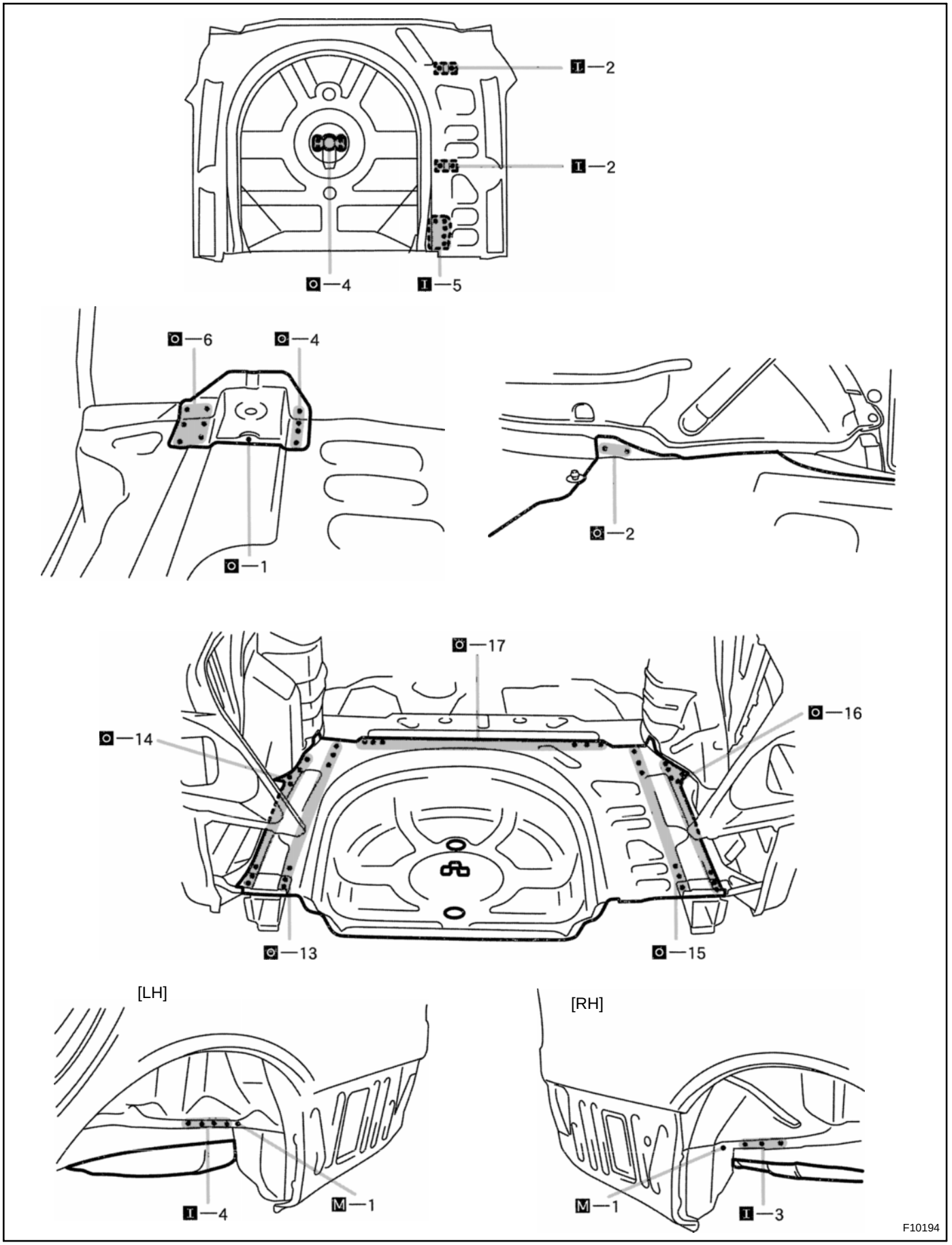

5. INSTALL REAR FLOOR NO. 3 CROSSMEMBER (See page BP-62)

6. INSTALL BODY LOWER BACK PANEL (See page BP-58)

7. APPLYING SEALER TO THE INSIDE OF THE VEHICLE (See page PC-1)

8. APPLYING SEALER TO THE REAR LUGGAGE COMPARTMENT (See page PC-1)

9. APPLYING UNDER COATING (See page PC-6)

10. APPLYING ANTI-RUST AGENT

(a) After applying the top coat layer, apply the anti-rust agent to the inside of the necked section structural weld spots.

11. INSTALL REAR FLOOR SILENCER SHEET (See page PC-9)

12. INSTALL REAR FLOOR SILENCER NO. 2 SHEET (See page PC-9)

REAR FLOOR SIDE PANEL (ASSY): Right Side

REPLACEMENT

1. REMOVE BODY LOWER BACK PANEL (See page BP-58)
2. REMOVE REAR FLOOR NO. 3 CROSSMEMBER (See page BP-62)
3. REMOVE REAR FLOOR PAN (See page BP-64)
4. REMOVE REAR FLOOR SIDE PANEL

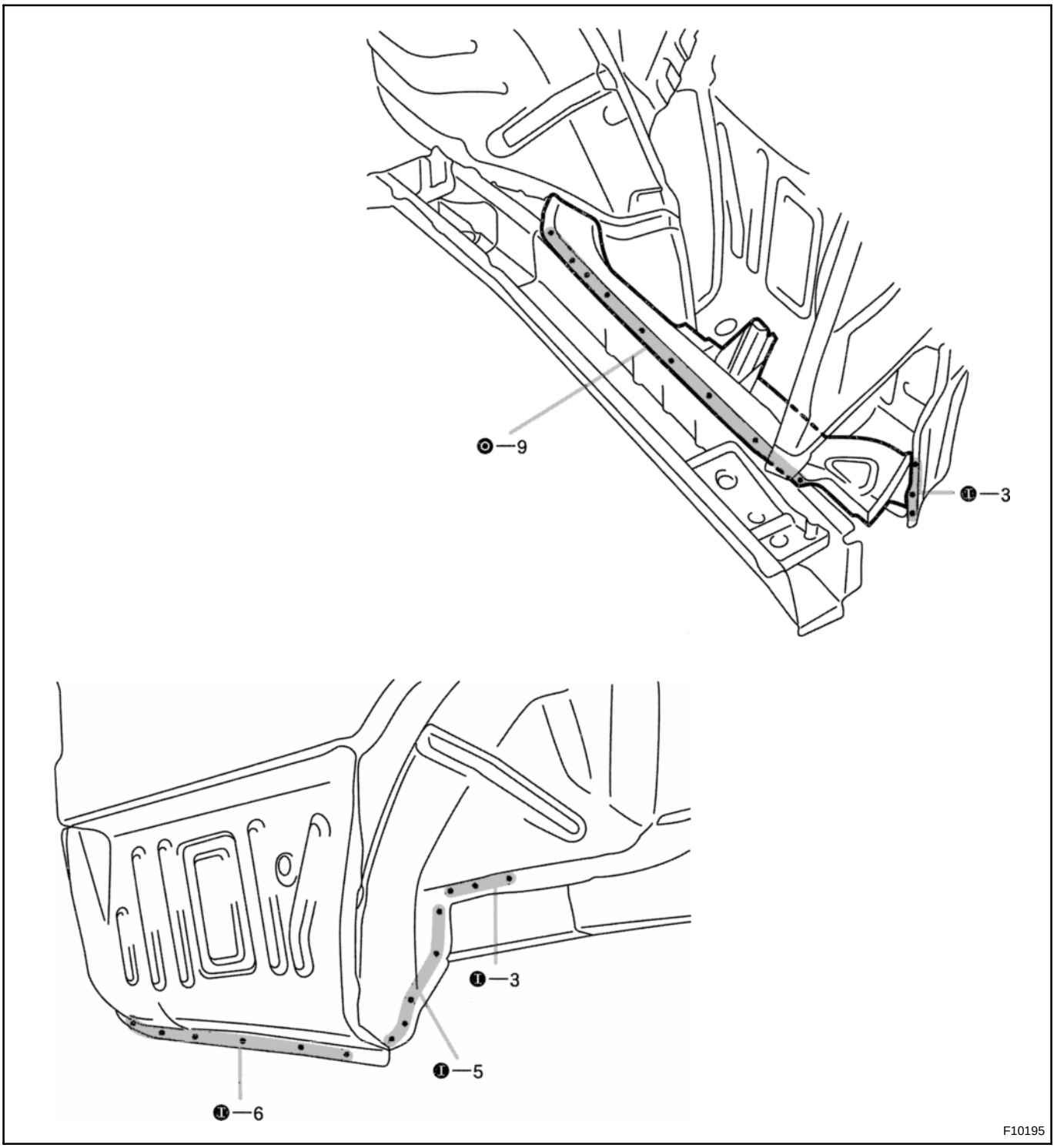

3. INSTALL REAR FLOOR SIDE PANEL

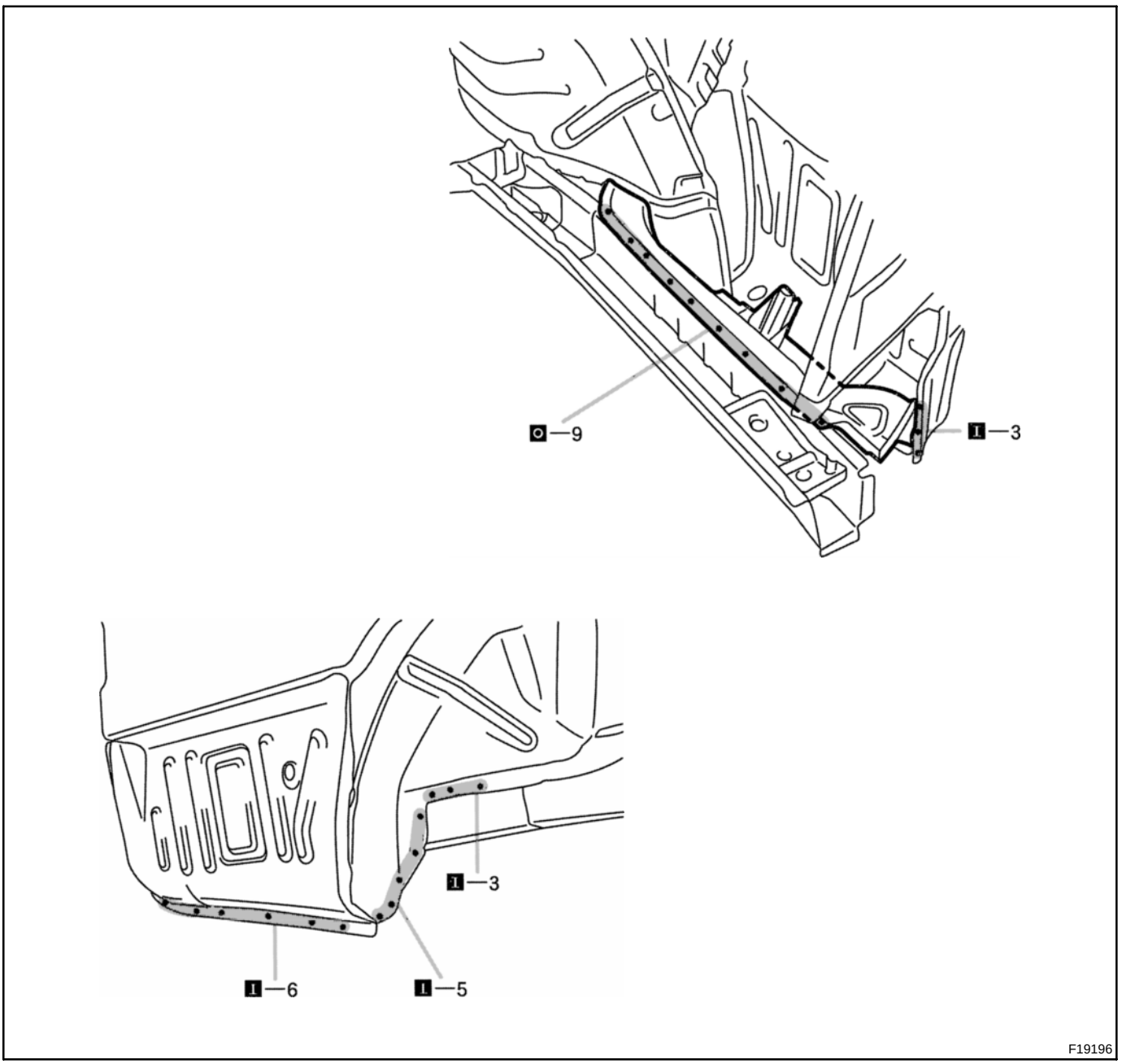

4. INSTALL REAR FLOOR PAN (See page BP-64)

5. INSTALL REAR FLOOR NO. 3 CROSSMEMBER (See page BP-62)

6. INSTALL BODY LOWER BACK PANEL (See page BP-58)

7. APPLYING SEALER TO THE REAR LUGGAGE COMPARTMENT (See page PC-1)

8. APPLYING UNDER COATING (See page PC-6)

9. APPLYING ANTI-RUST AGENT

(a) After applying the top coat layer, apply the anti-rust agent to the inside of the necked section structural weld spots.

10. INSTALL REAR FLOOR SILENCER SHEET (See page PC-9)

11. INSTALL REAR FLOOR SILENCER NO. 2 SHEET (See page PC-9)

REAR FLOOR SIDE PANEL (ASSY): Left Side

REPLACEMENT

1. REMOVE BODY LOWER BACK PANEL (See page BP-58)
2. REMOVE REAR FLOOR NO. 3 CROSSMEMBER (See page BP-62)
3. REMOVE REAR FLOOR PAN (See page BP-64)
4. REMOVE REAR FLOOR SIDE PANEL

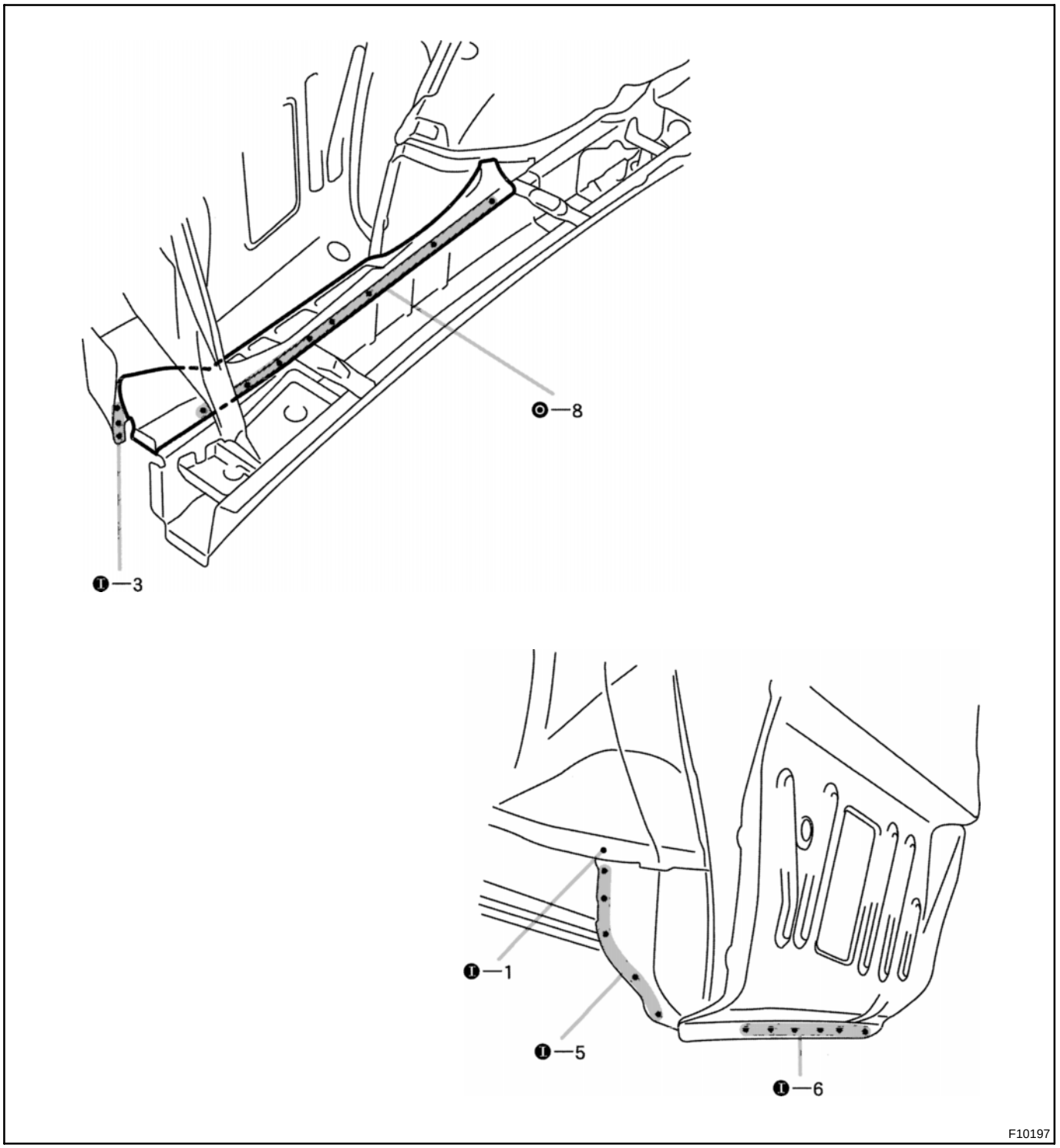

3. INSTALL REAR FLOOR SIDE PANEL

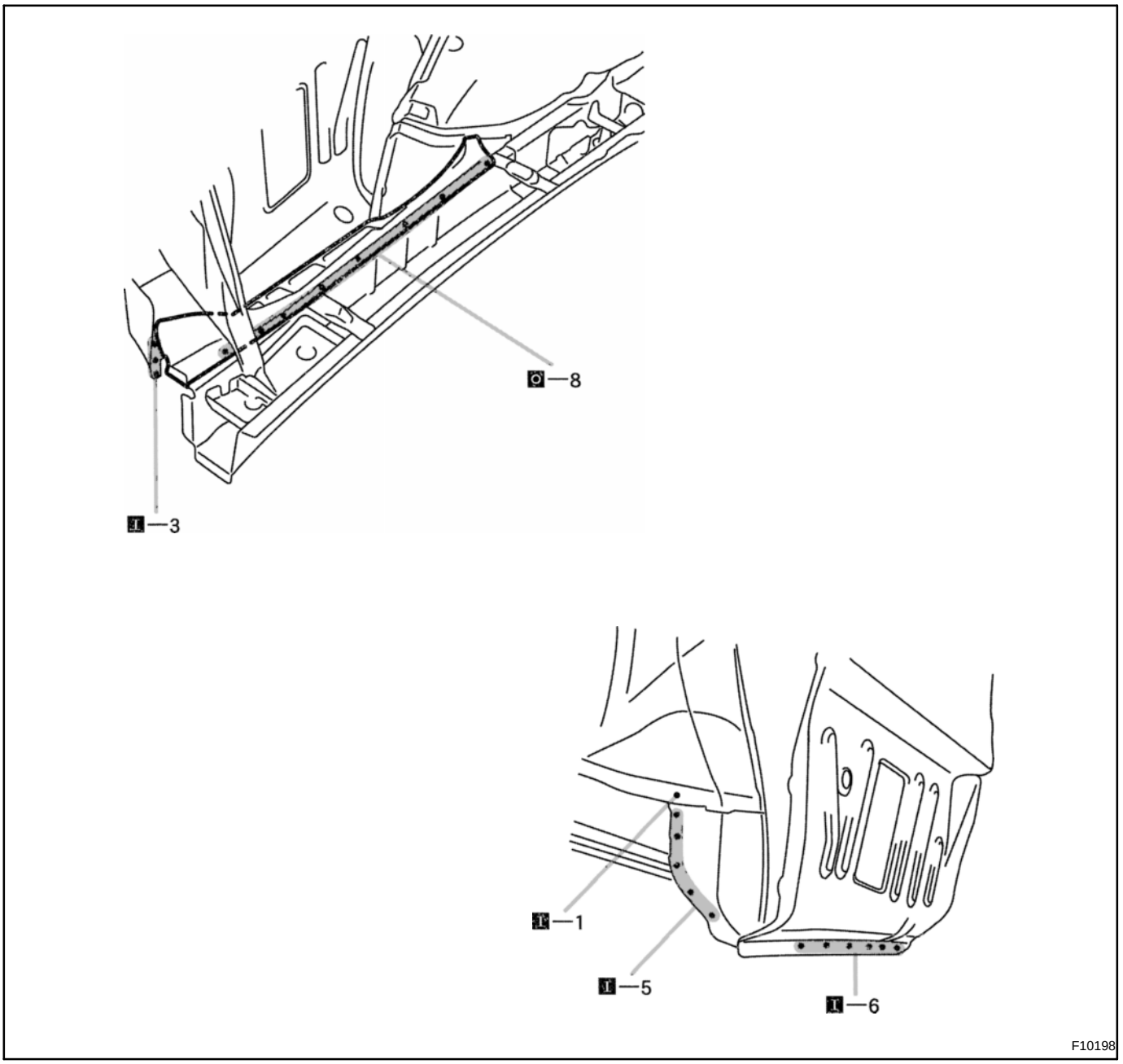

4. INSTALL REAR FLOOR PAN (See page BP-64)

5. INSTALL REAR FLOOR NO. 3 CROSSMEMBER (See page BP-62)

6. INSTALL BODY LOWER BACK PANEL (See page BP-58)

7. APPLYING SEALER TO THE REAR LUGGAGE COMPARTMENT (See page PC-1)

8. APPLYING UNDER COATING (See page PC-6)

9. APPLYING ANTI-RUST AGENT

(a) After applying the top coat layer, apply the anti-rust agent to the inside of the necked section structural weld spots.

10. INSTALL REAR FLOOR SILENCER SHEET (See page PC-9)

11. INSTALL REAR FLOOR SILENCER NO. 2 SHEET (See page PC-9)

REAR FLOOR SIDE REAR MEMBER (ASSY)

REPLACEMENT

1. REMOVE BODY LOWER BACK PANEL (See page BP-58)
2. REMOVE REAR FLOOR NO. 3 CROSSMEMBER (See page BP-62)
3. REMOVE REAR FLOOR SIDE REAR MEMBER

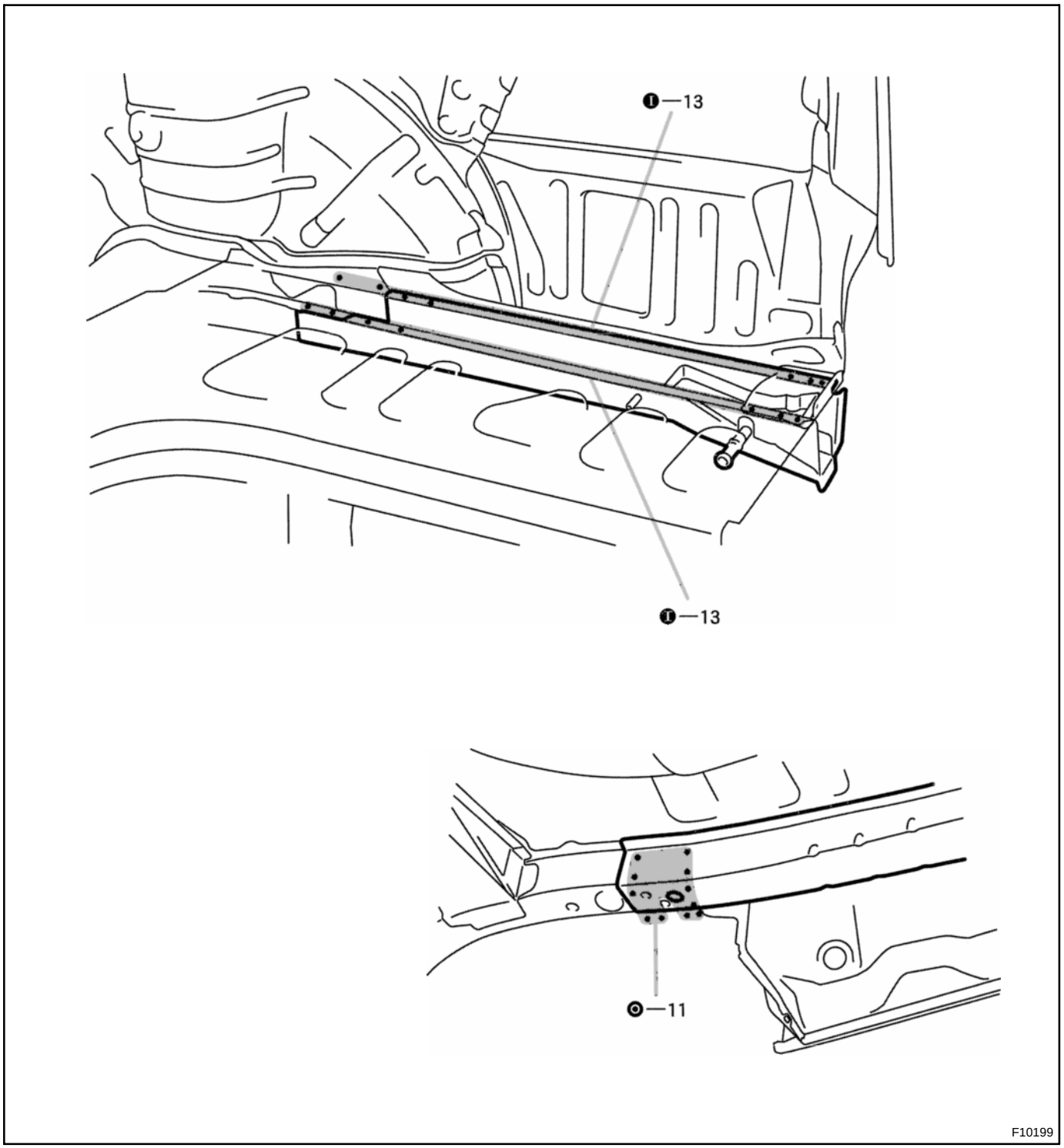

4. INSTALL REAR FLOOR SIDE REAR MEMBER

(a) When temporarily installing the new parts, determine the installation position by the assembly mark. Then, measure each part in accordance with the body dimension diagram.

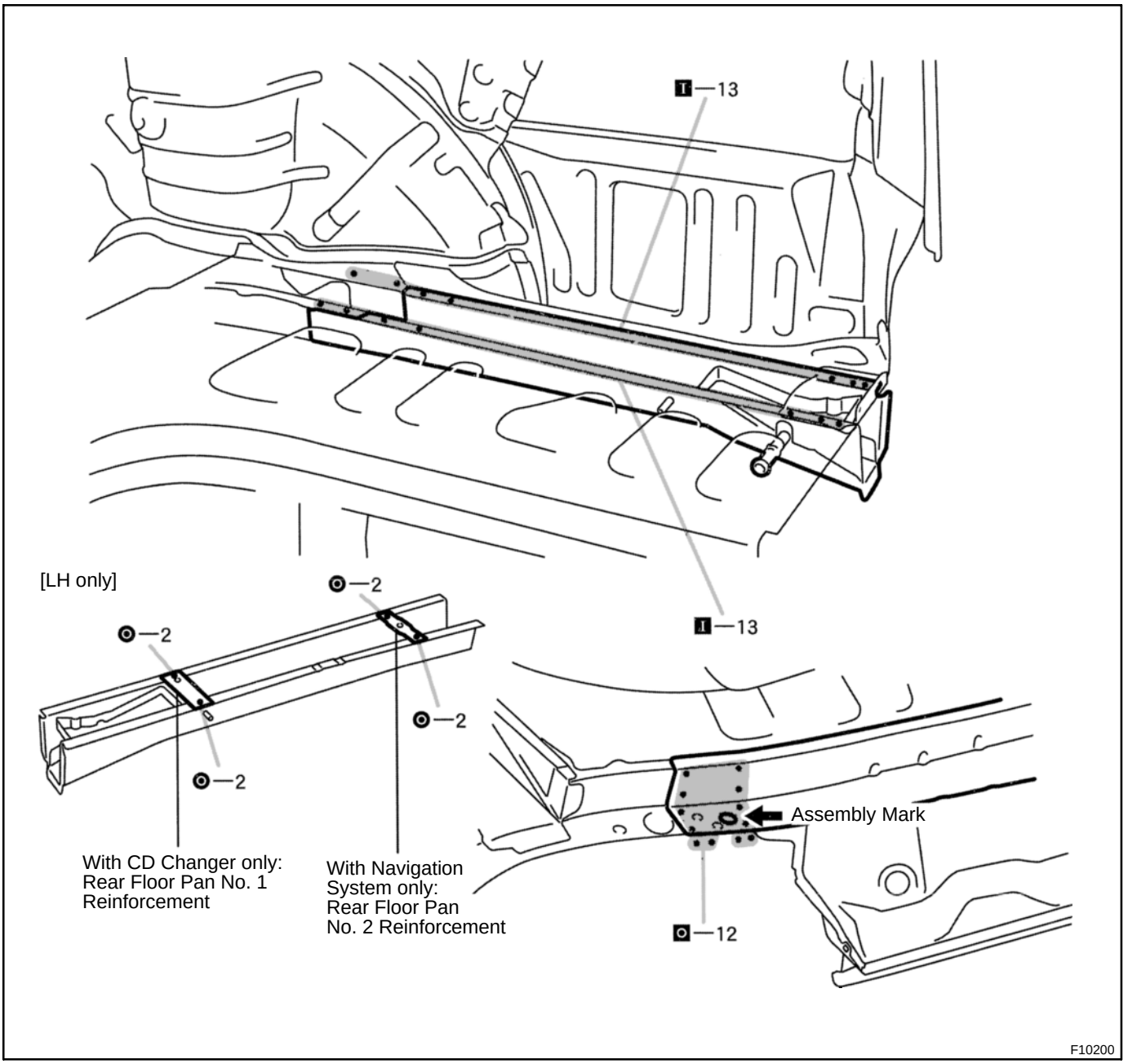

5. MEASURING THE UNDER BODY DIMENSIONS (See page BP-85)

6. INSTALL REAR FLOOR NO. 3 CROSSMEMBER (See page BP-62)

7. INSTALL BODY LOWER BACK PANEL (See page BP-58)

8. APPLYING SEALER TO THE INSIDE OF THE VEHICLE (See page PC-1)

9. APPLYING SEALER TO THE REAR LUGGAGE COMPARTMENT (See page PC-1)

10. APPLYING UNDER COATING (See page PC-6)

11. APPLYING AUTI-RUST AGENT

(a) After applying the top coat layer, apply the anti-rust agent to the inside of the necked section structural weld spots.

12. INSTALL REAR FLOOR SILENCER SHEET (See page PC-9)

REAR FLOOR NO. 2 CROSSMEMBER (ASSY)

REPLACEMENT

1. REMOVE REAR FLOOR NO. 2 CROSSMEMBER

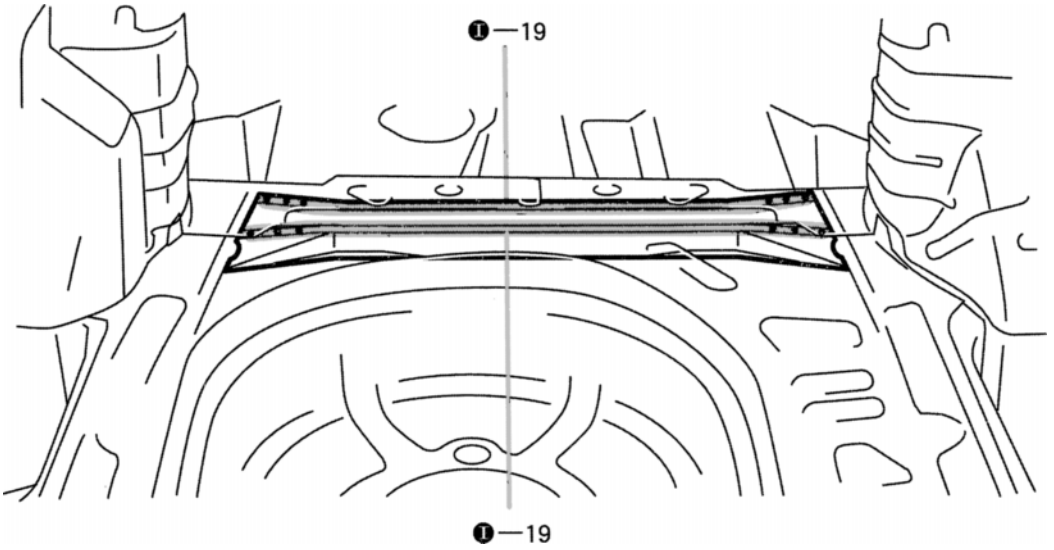

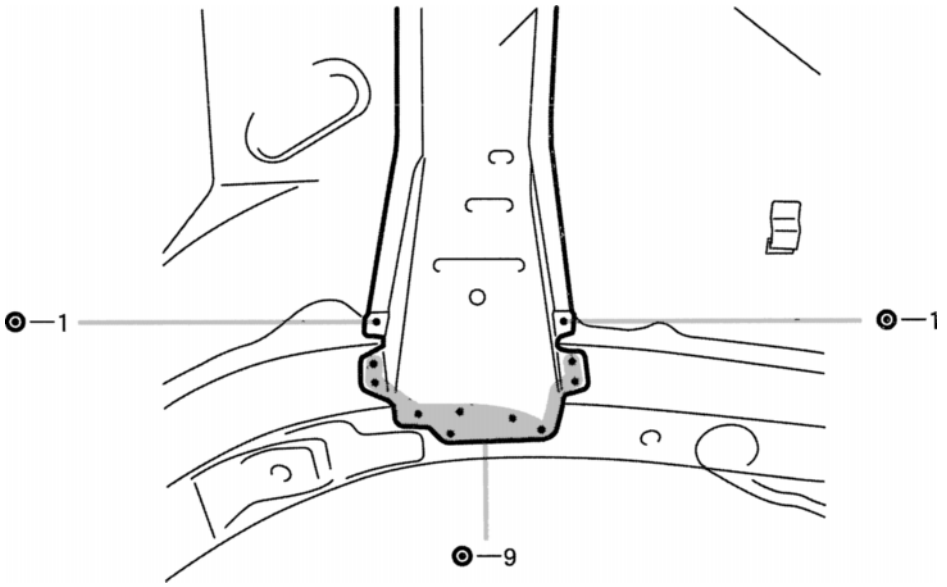

F10201

2. INSTALL REAR FLOOR NO. 2 CROSSMEMBER

(a) Temporarily install the new parts and measure each part in accordance with the body dimension diagram.

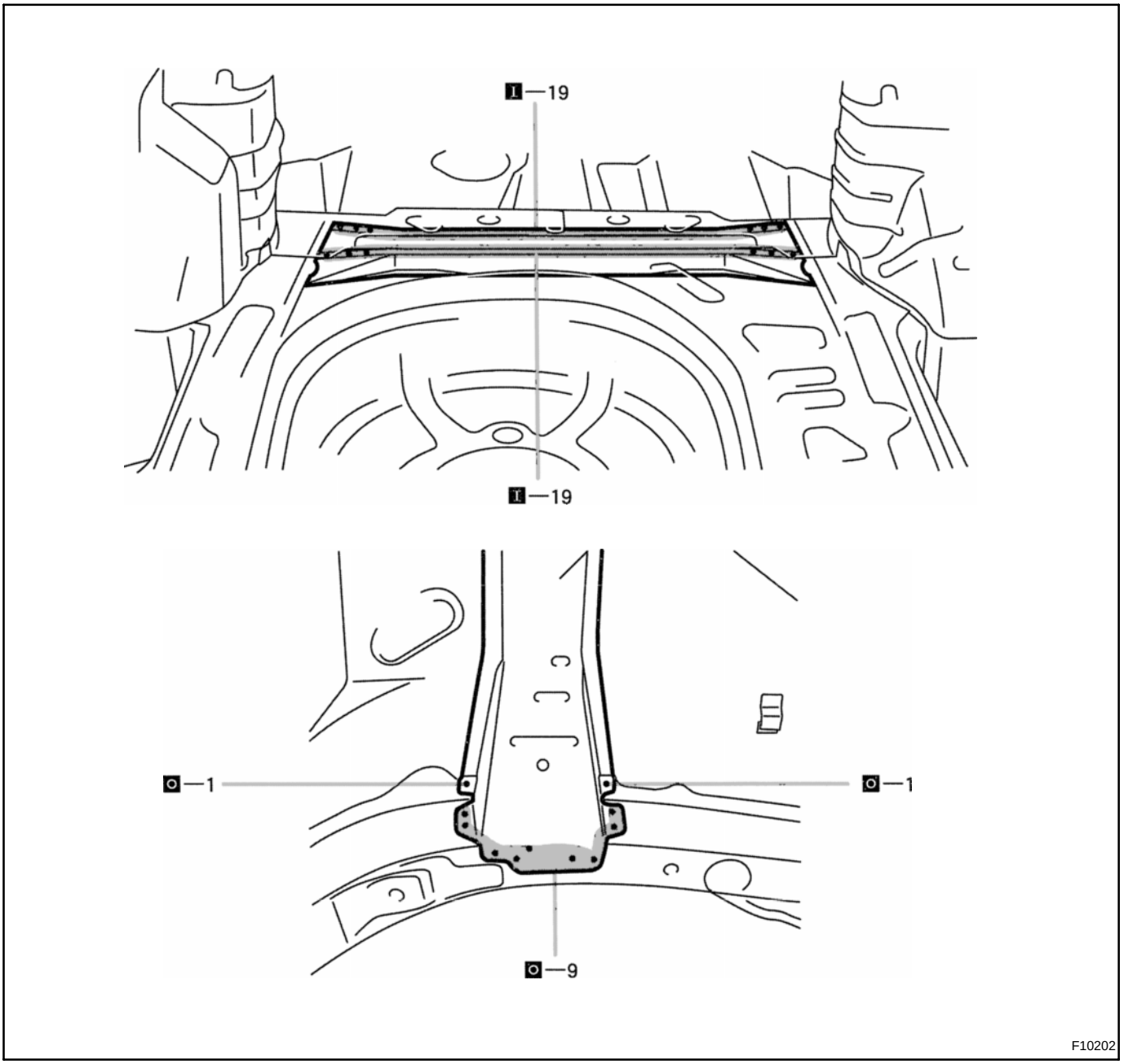

3. MEASURING THE UNDER BODY DIMENSIONS (See page BP-85)

4. APPLYING SEALER TO THE INSIDE OF THE VEHICLE (See page PC-1)

5. APPLYING UNDER COATING (See page PC-6)

6. APPLYING ANTI-RUST AGENT

(a) After applying the top coat layer, apply the anti-rust agent to the inside of the necked section structoral weld spots.

7. INSTALL CENTER FLOOR SILENCER SHEET (See page PC-9)

8. INSTALL REAR FLOOR SILENCER SHEET (See page PC-9)

REAR FLOOR NO. 3 CROSSMEMBER (ASSY)

REPLACEMENT

1. REMOVE BODY LOWER BACK PANEL (See page BP-58)
2. REMOVE REAR FLOOR NO. 3 CROSSMEMBER

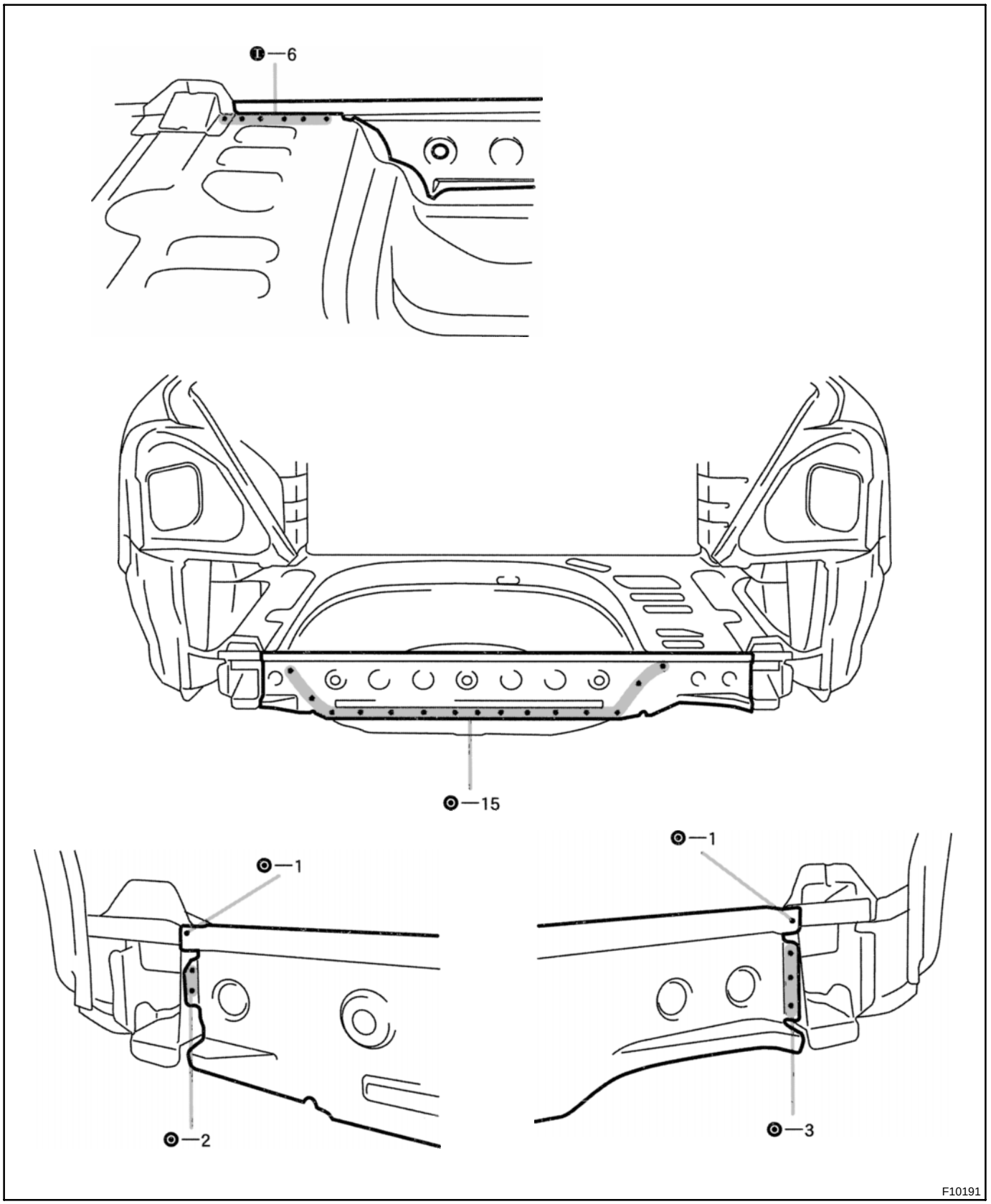

3. INSTALL REAR FLOOR NO. 3 CROSSMEMBER

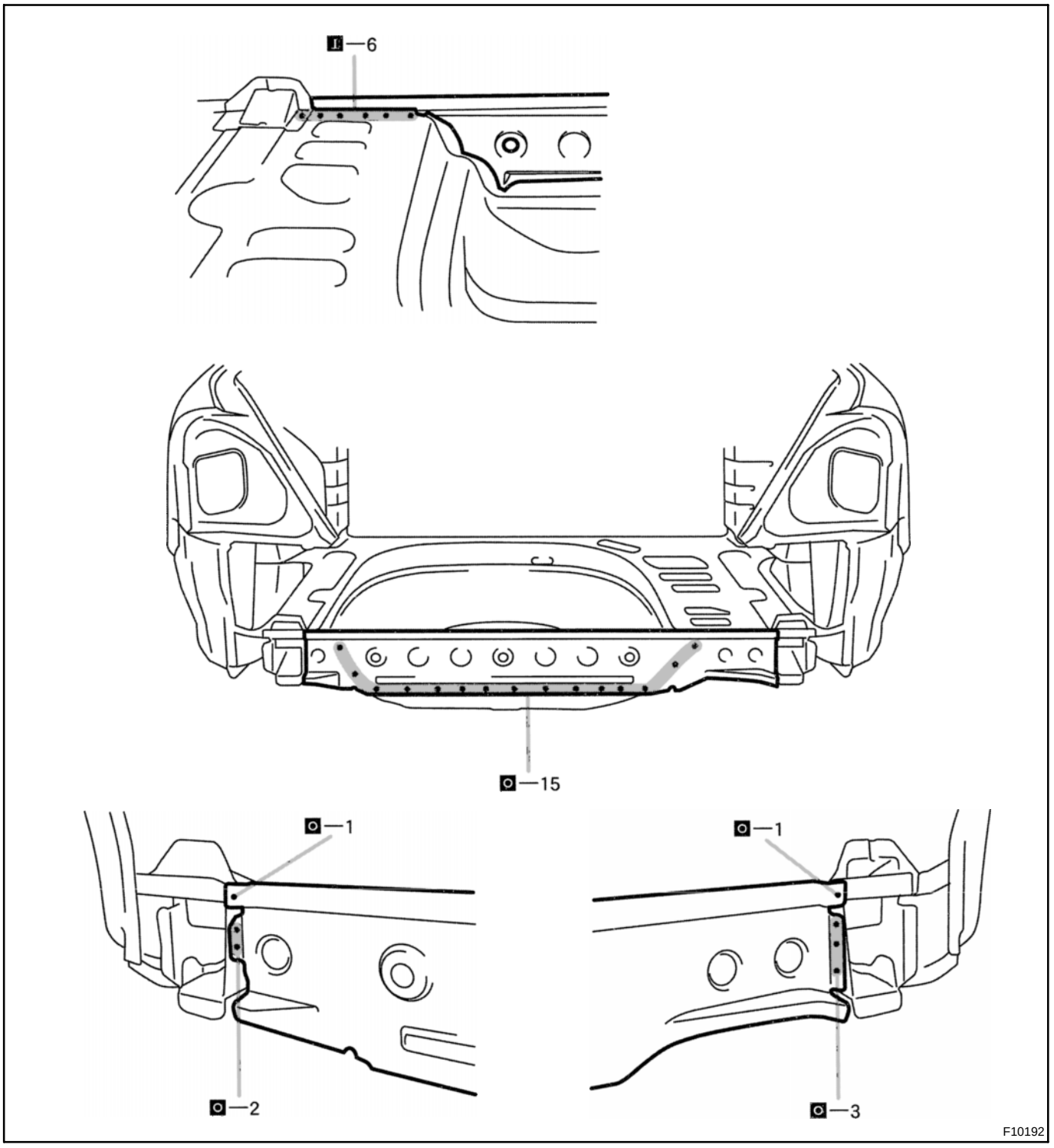

4. **INSTALL BODY LOWER BACK PANEL (See page BP-58)**
5. **APPLYING SEALER TO THE REAR LUGGAGE COMPARTMENT (See page PC-1)**
6. **APPLYING UNDER COATING (See page PC-6)**
7. **APPLYING ANTI-RUST AGENT**

(a) After applying the top coat layer, apply the anti-rust agent to the inside of the necked section structural weld spots.

ROCKER OUTER EXTENSION (CUT)

REPLACEMENT

1. **REMOVE QUARTER PANEL (See page BP-49)**
2. **REMOVE ROCKER OUTER EXTENSION**

(a) Cut and join the parts at the location as shown below.

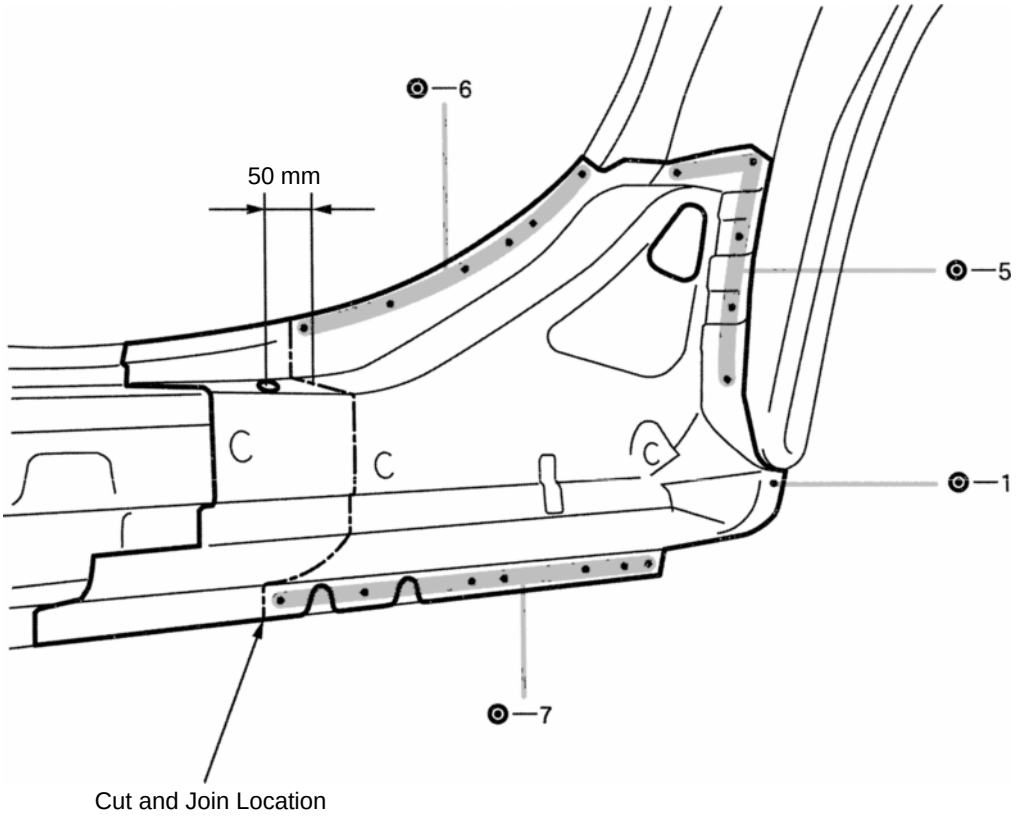

mm	in.
50	1.97

F10179

3. INSTALL ROCKER OUTER EXTENSION

HINT:
Temporarily install the quarter panel and inspect the fitting before welding, since this affects the appearance of the finish.

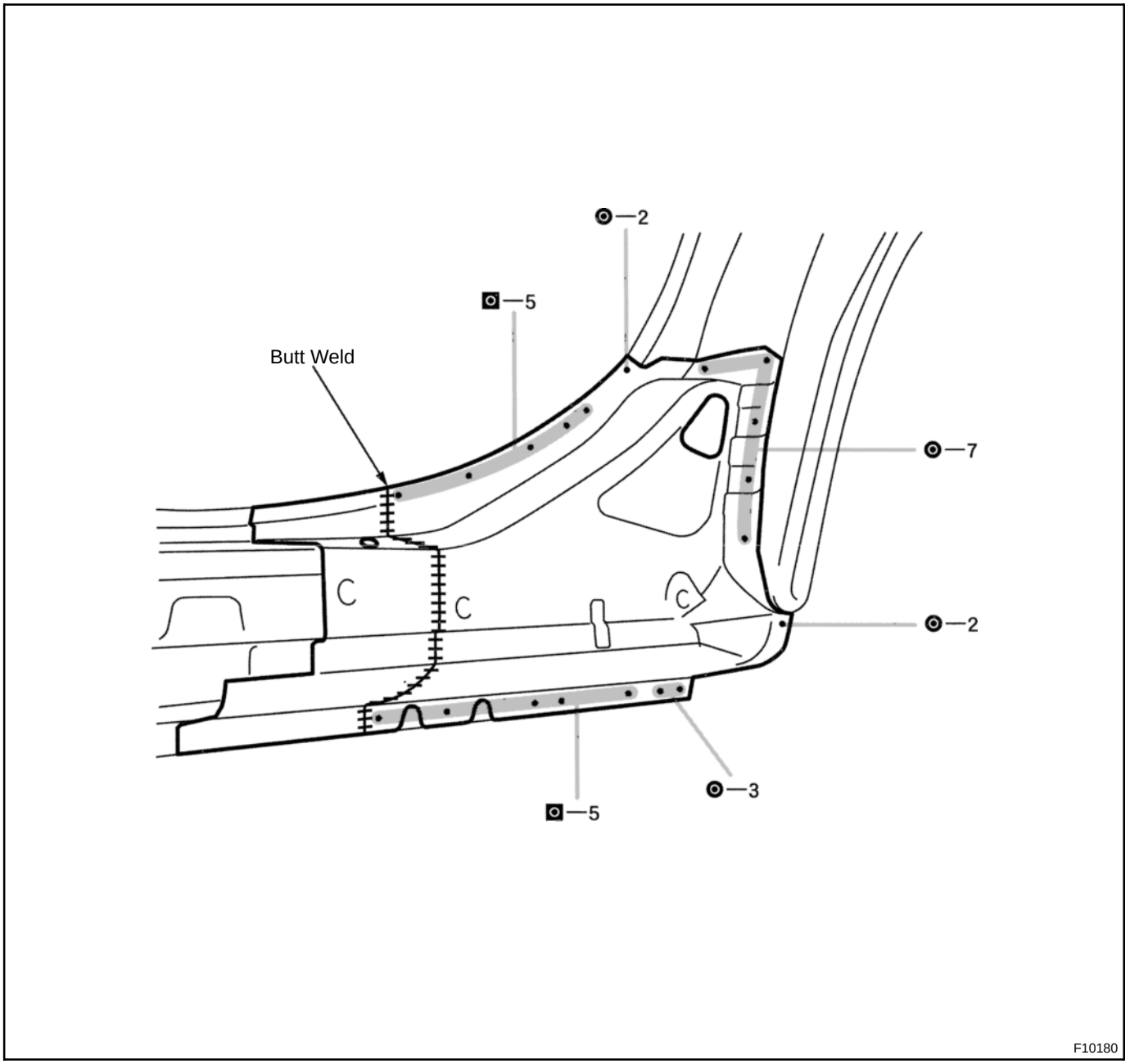

4. INSTALL QUARTER PANEL (See page BP-49)

5. APPLYING SEALER TO THE INSIDE OF THE VEHICLE (See page PC-1)

6. APPLYING SEALER TO THE REAR LUGGAGE COMPARTMENT (See page PC-1)

7. APPLYING UNDER COATING (See page PC-6)

8. CHARGING THE POLYURETHANE FOAM (See page PC-8)

9. APPLYING ANTI-RUST AGENT

(a) After applying the top coat layer, apply the anti-rust agent to the inside of the necked section structural weld spots.

ROCKER OUTER PANEL (CUT)

REPLACEMENT

1. REMOVE ROCKER OUTER PANEL

(a) Cut and join the parts at the locations as shown below.

HINT:
Take care not to damage the internal reinforcement.

(b) After removing the center body outer pillar, remove the center body pillar lower reinforcement.

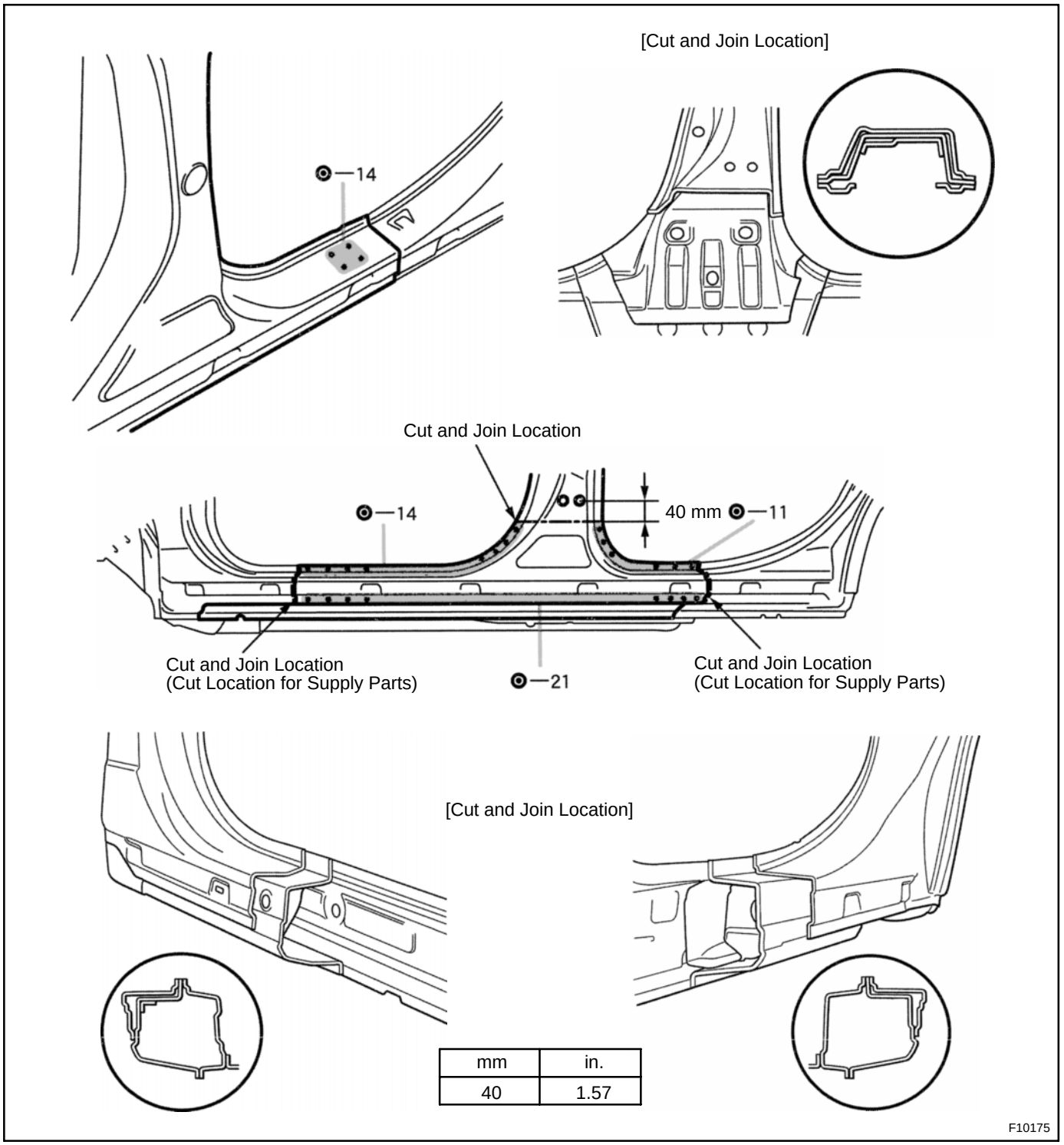

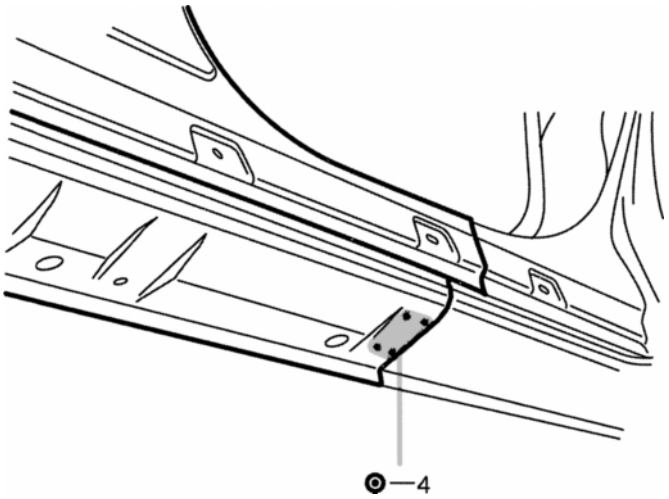

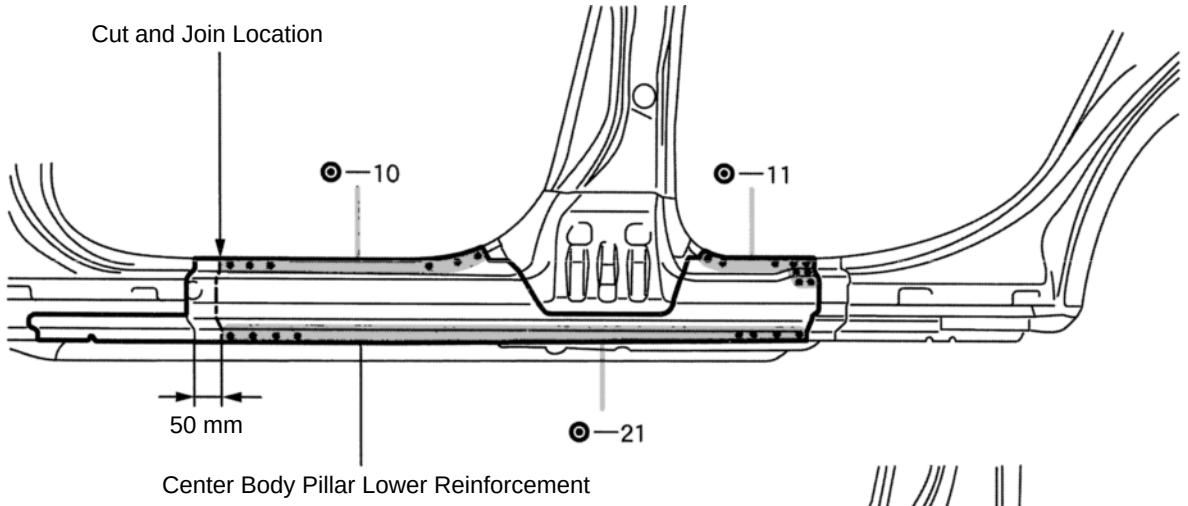

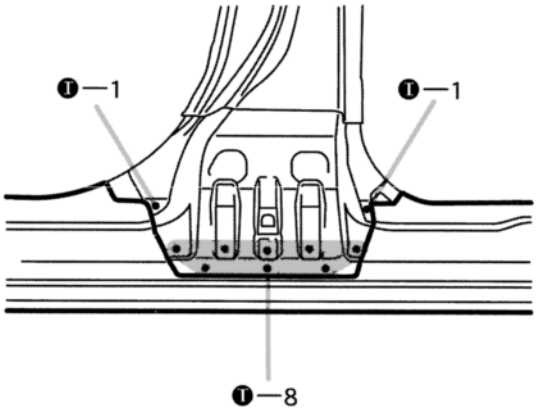

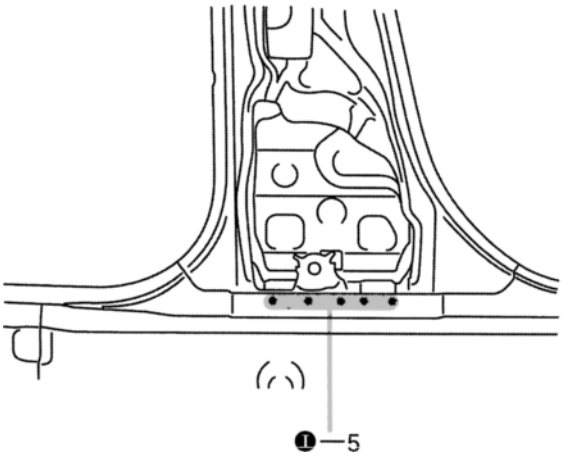

mm	in.
50	1.97

F10176

2. INSTALL ROCKER OUTER PANEL

HINT:
Inspect the fitting of the front door and rear door, etc., before welding, since this affects the appearance of the finish.

(a) After installing the center body pillar lower reinforcement, install the center body outer pillar.

(b) Temporarily install the new parts and measure each part in accordance with the body dimension diagram.

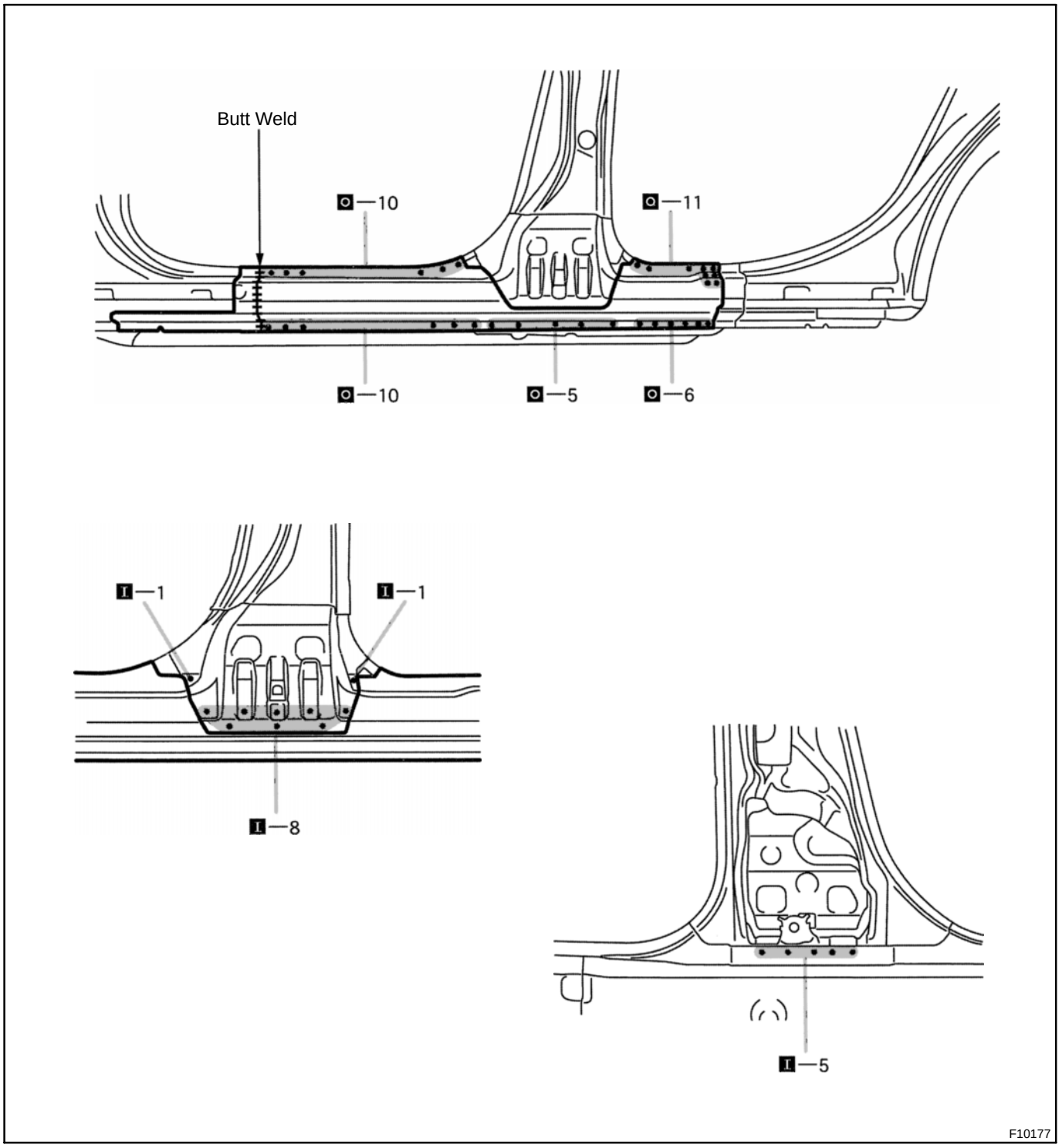

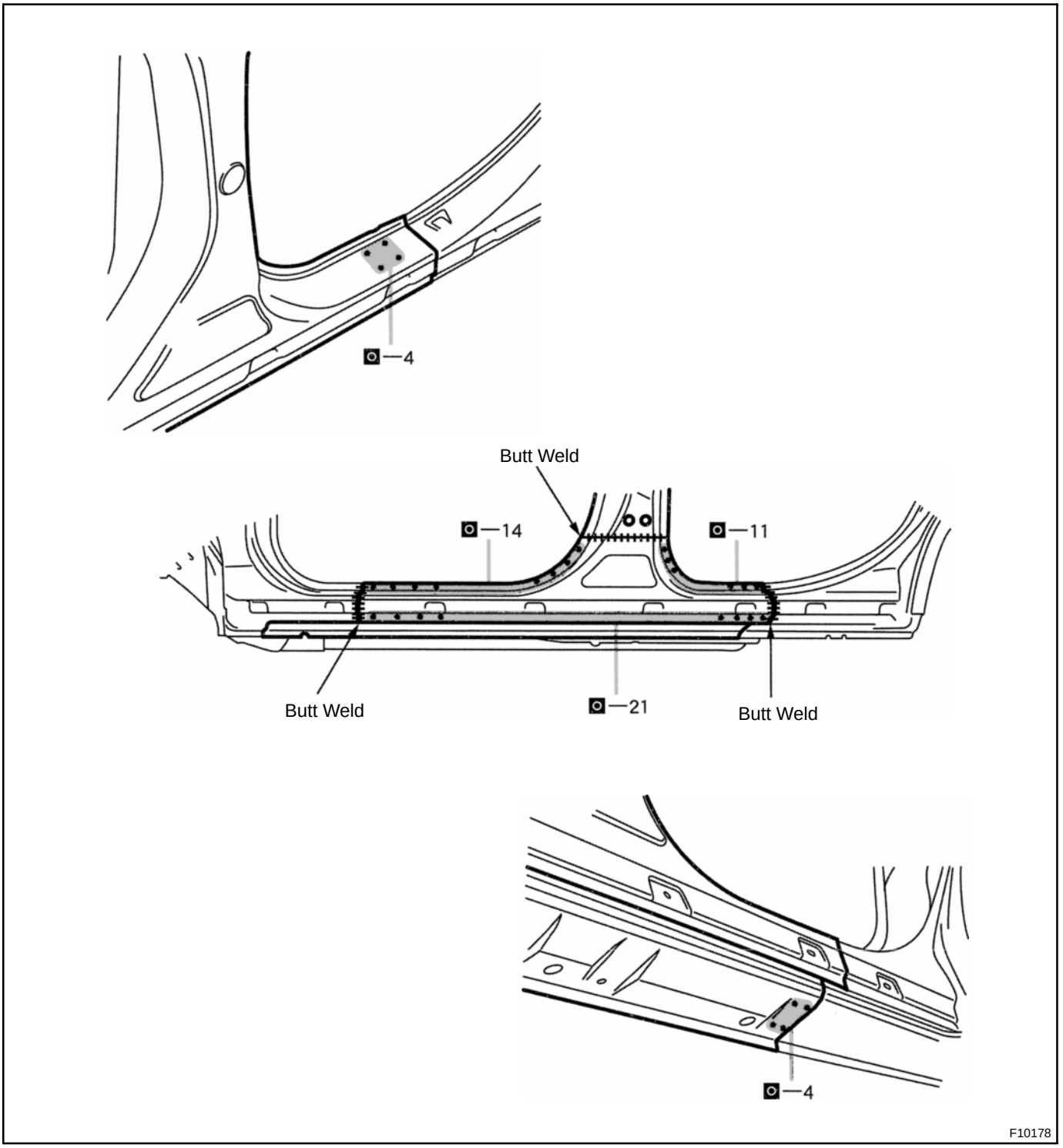

3. MEASURING THE OPENING PORTION DIMENSIONS (See page BP-84)

4. APPLYING SEALER TO THE INSIDE OF THE VEHICLE (See page PC-1)

5. APPLYING ANTI-RUST AGENT

(a) After applying the top coat layer, apply the anti-rust agent to the inside of the necked section structural weld spots.

ROOF PANEL (ASSY): w/ Moon Roof

REPLACEMENT

1. REMOVE ROOF PANEL

(If resusing the roof panel reinforcement)

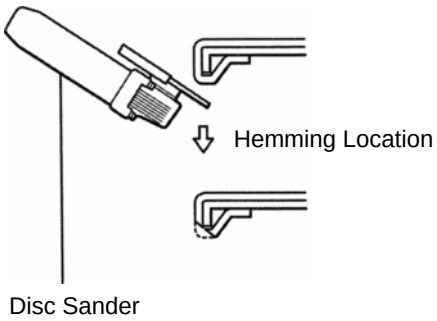

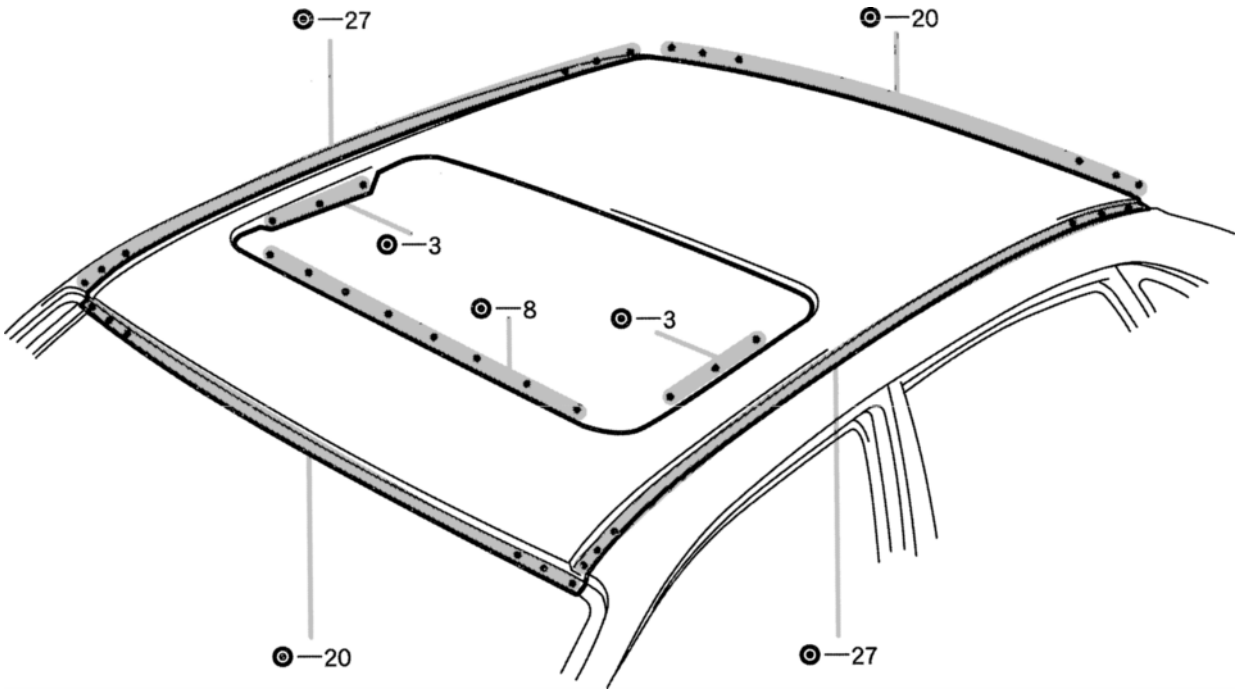

F10205

2. INSTALL ROOF PANEL

(a) Before temporarily installing the new parts, apply body sealer to the windshield header panel, roof panel reinforcement and back window frame.

HINT:

- *Apply just enough sealer for the new parts to make contact.*
- *For other sealing points, refer to section PC.*

(b) Bend the flange hem with a wooden hammer and dolly.

HINT:
Perform hemming three steps, being careful not to warp the panel.

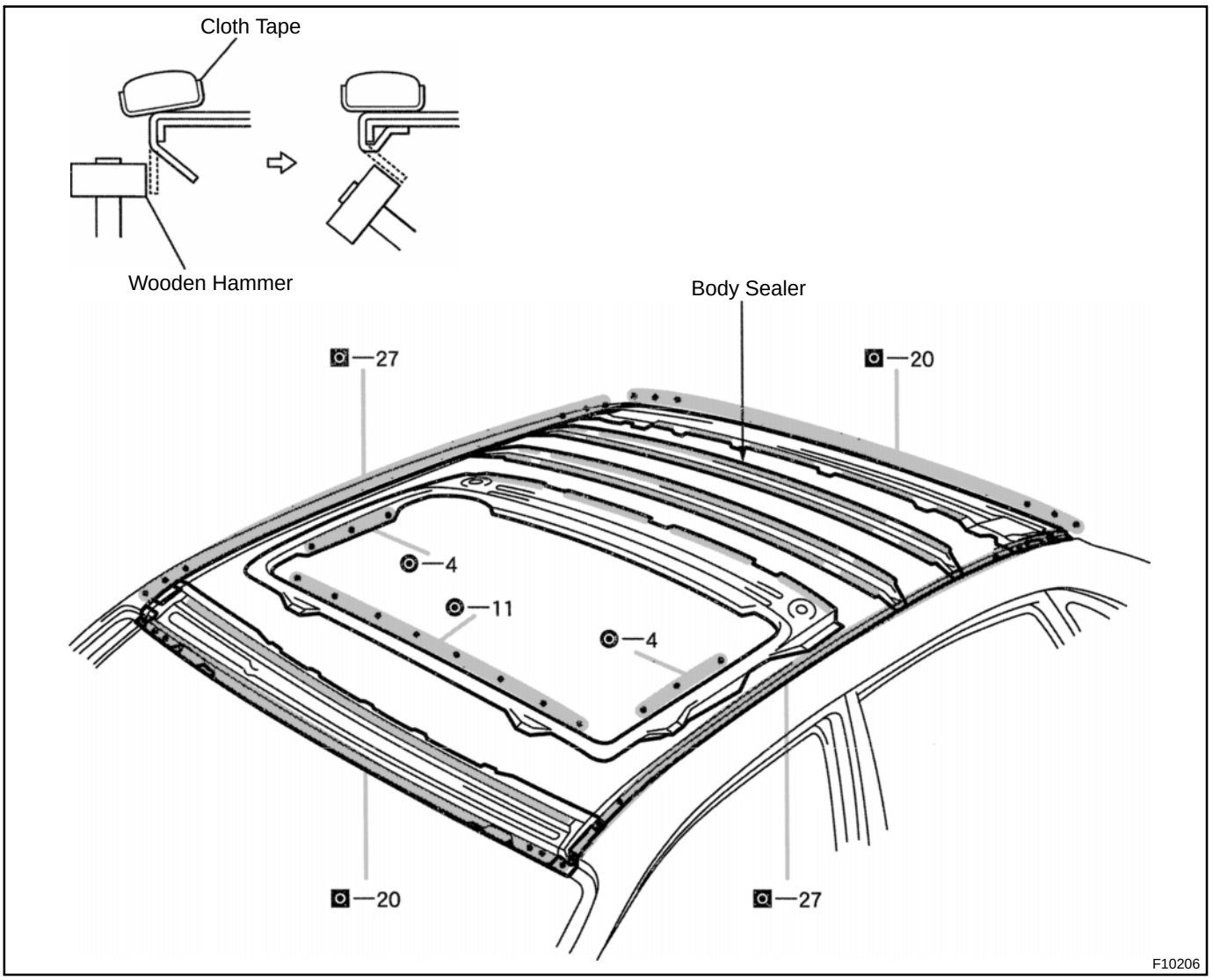

3. APPLYING SEALER TO THE INSIDE OF THE VEHICLE (See page PC-1)

4. APPLYING SEALER TO THE REAR LUGGAGE COMPARTMENT (See page PC-1)

5. CHARGING THE POLYURETHANE FOAM (See page PC-8)

6. APPLYING ANTI-RUST AGENT

(a) After applying the top coat layer, apply the anti-rust agent to the inside of the necked section structural weld spots.

ROOF PANEL (ASSY): w/o Moon Roof

REPLACEMENT

1. REMOVE ROOF PANEL

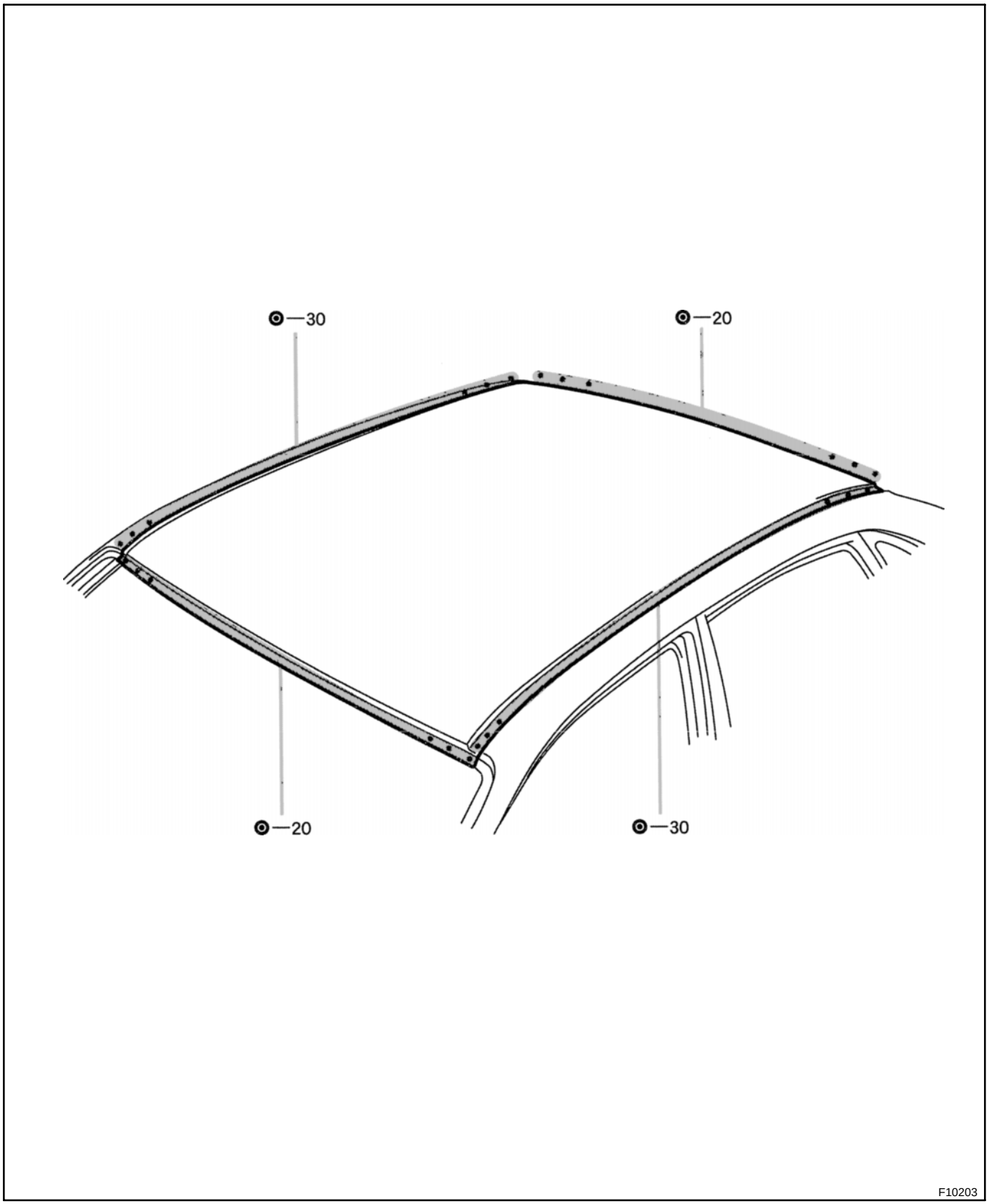

2. INSTALL ROOF PANEL

(a) Before temporarily installing the new parts, apply body sealer to the windshield header panel, roof panel reinforcement and back window frame.

HINT:

- *Apply just enough sealer for the new parts to make contact.*
- *For other sealing points, refer to section PC.*

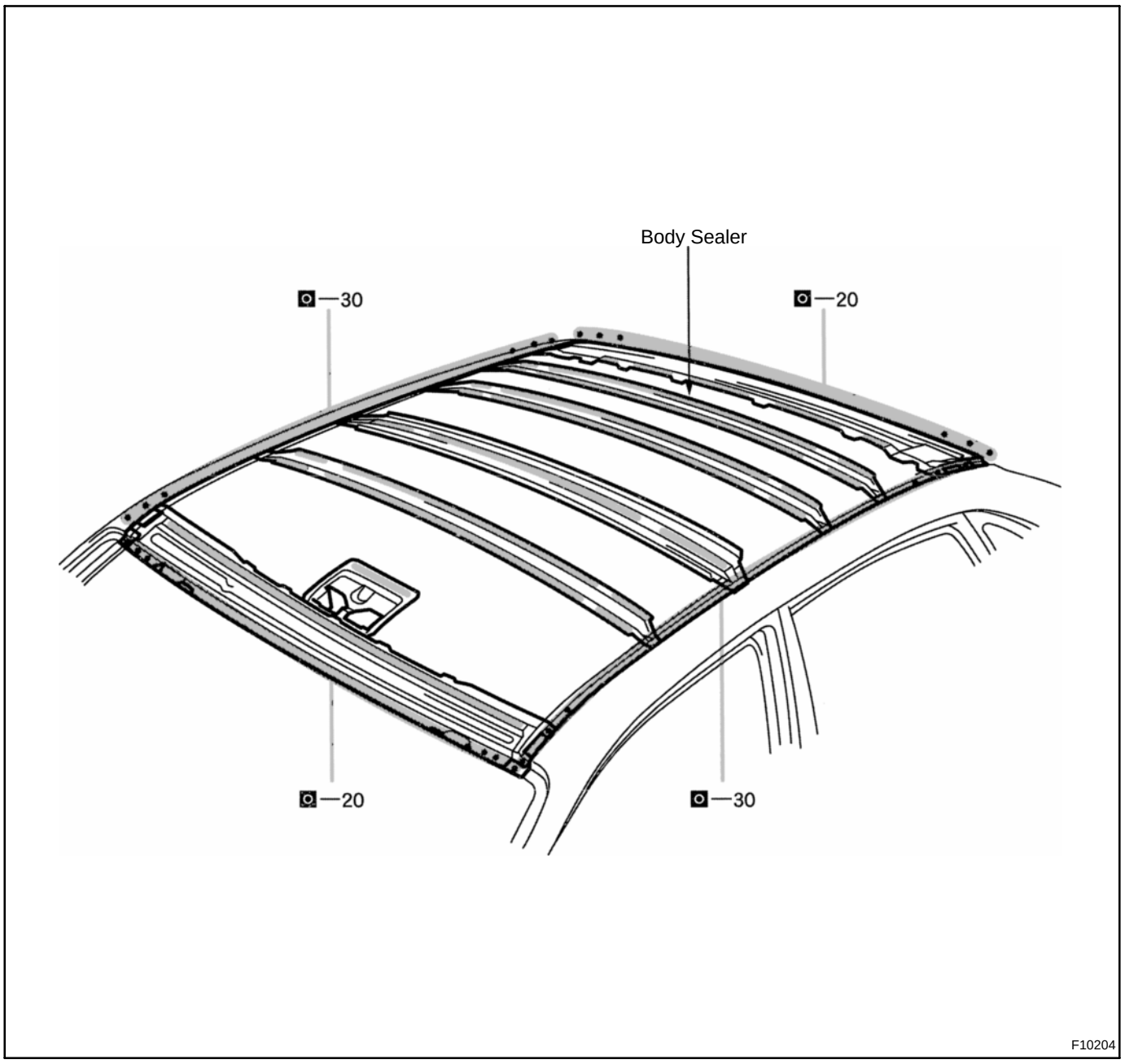

3. APPLYING SEALER TO THE INSIDE OF THE VEHICLE (See page PC-1)

4. APPLYING SEALER TO THE REAR LUGGAGE COMPARTMENT (See page PC-1)

5. CHARGING THE POLYURETHANE FOAM (See page PC-8)

6. APPLYING ANTI-RUST AGENT

(a) After applying the top coat layer, apply the anti-rust agent to the inside of the necked section structural weld spots.

ABBREVIATIONS USED IN THIS MANUAL

For convenience, the following abbreviations are used in this manual.

ABS	Antilock Brake System
A/C	Air Conditioner
assy	assembly
ECT	Electronic Controlled Transmission
ECU	Electronic Control Unit
e.g.	Exempli Gratia (for Example)
Ex.	Except
FWD	Front Wheel Drive Vehicles
4WD	Four Wheel Drive Vehicles
in.	inch
LH	Left-hand
LHD	Left-hand Drive
MIG	Metal Inert Gas
M/Y	Model Year
PPS	Progressive Power Steering
RH	Right-hand
RHD	Right-hand Drive
SRS	Supplemental Restraint System
SSM	Special Service Materials
w/	with
w/o	without

FOREWORD

This repair manual has been prepared to provide essential information on body panel repair methods (including cutting and welding operations, but excluding painting) for the TOYOTA AVALON.

Applicable models: MCX20 series

This manual consists of body repair methods, exploded diagrams and illustrations of the body components and other information relating to body panel replacement such as handling precautions, etc. However, it should be noted that the front fenders of the TOYOTA model is bolted on and require no welding.

When repairing, don't cut and join areas that are not shown in this manual. Only work on the specified contents to maintain body strength.

Body construction will sometimes differ depending on specifications and country of destination. Therefore, please keep in mind that the information contained herein is based on vehicles for general destinations.

For the repair procedures and specifications other than collision-damaged body components of the TOYOTA AVALON refer to the repair manuals.

If you require the above manuals, please contact your TOYOTA Dealer.

All information contained in this manual is the most up-to-date at the time of publication. However, specifications and procedures are subject to change without prior notice.

TOYOTA MOTOR CORPORATION

GENERAL REPAIR INSTRUCTIONS

1. WORK PRECAUTIONS

(a) VEHICLE PROTECTION

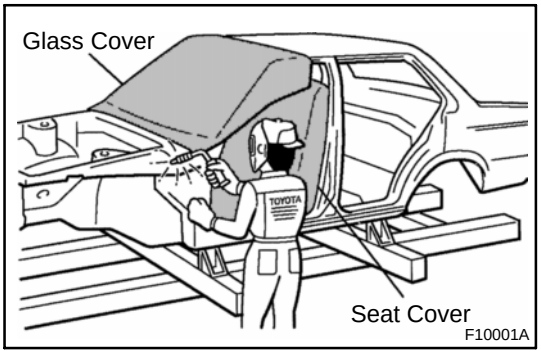

(1) When welding, protect the painted surfaces, windows, seats and carpet with heat resistant, fire-proof covers.

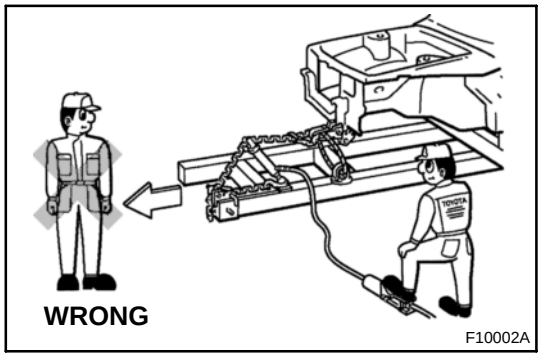

(b) SAFETY

(1) Never stand in direct line with the chain when using a pulley on the body or frame, and be sure to attach a safety cable.

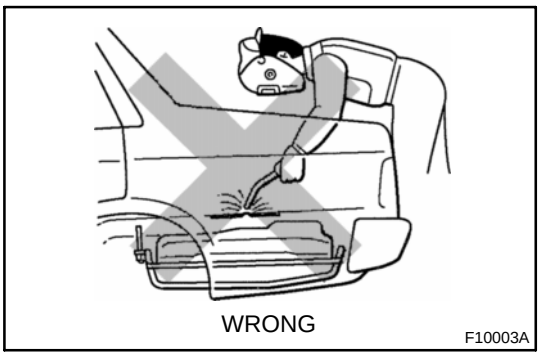

(2) Before performing repair work, check for fuel leaks. If a leak is found, be sure to close the opening totally.

(3) If it is necessary to use a frame in the area of the fuel tank, first remove the tank and plug the fuel line.

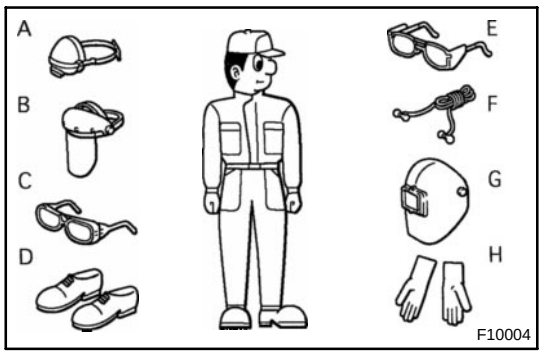

(c) SAFETY WORK CLOTHES

(1) In addition to the usual mechanic's wear, cap and safety shoes, the appropriate gloves, head protector, glasses, ear plugs, face protector, dust-prevention mask, etc. should be worn as the situation demands.

Code	Name
A	Dust-Prevention Mask
B	Face Protector
C	Eye Protector
D	Safety Shoes
E	Welder's Glasses
F	Ear Plugs
G	Head Protector
H	Welder's Gloves

2. HANDLING PRECAUTIONS OF PLASTIC BODY PARTS

(1) The repair procedure for plastic body parts must conform with the type of plastic material.

(2) Plastic body parts are identified by the codes in the following chart.

(3) When repairing metal body parts adjoining plastic body parts (by brazing, frame cutting, welding, painting etc.), consideration must given to the property of the plastic.

Code	Material name	Heat* resistant temperature limit ˚C (˚F)	Resistance to alcohol or gasoline	Notes
AAS	Acrylonitrile Acrylic Styrene	80 (176)	Alcohol is harmless if applied only for short time in small amounts (e.g., quick wiping to remove grease.)	Avoid gasoline and organic or aromatic solvents.
ABS	Acrylonitrile Butadiene Styrene	80 (176)	Alcohol is harmless if applied only for short time in small amounts (e.g., quick wiping to remove grease).	Avoid gasoline and organic or aromatic solvents.
AES	Acylonitrile Ethylene Styrene	80 (176)	Alcohol is harmless if applied only for short time in small amounts (e.g., quick wiping to remove grease).	Avoid gasoline and organic or aromatic solvents.
ASA	Acrylonitrile Styrene Acrylate	80 (176)	Alcohol is harmless if applied only for short time in small amounts (e.g., quick wiping to remove grease).	Avoid gasoline and organic or aromatic solvents.
CAB	Cellulose Acetate	80 (176)	Alcohol is harmless if applied only for short time in small amounts (e.g., quick wiping to remove grease).	Avoid gasoline and organic or aromatic solvents.
EPDM	Ethylene Propylene	100 (212)	Alcohol is harmless. Gasoline is harmless if applied only for short time in small amounts.	Most solvents are harmless but avoid dipping in gasoline, solvents, etc.
FRP	Fiber Reinforced Plastics	180 (356)	Alcohol and gasoline are harmless.	Avoid alkali.
EVA	Ethylene Acetate	70 (158)	Alcohol is harmless if applied only for short time in small amounts (e.g., quick wiping to remove grease).	Avoid gasoline and organic oraromatic solvents.
PA	Polyamide (Nylon)	80 (176)	Alcohol and gasoline are harmless.	Avoid battery acid.
PBT	Polybutylene Terephthalate	160 (320)	Alcohol and gasoline are harmless.	Most solvents are harmless.
PC	Polycarbonate	120 (248)	Alcohol is harmless.	Avoid gasoline brake fluid, wax, wax removers and organic solvents. Avoid alkali.

*Temperatures higher than those listed here may result in material deformation during repair.

Code	Material name	Heat* resistant temperature limit ˚C (˚F)	Resistance to alcohol or gasoline	Notes
PE	Polyethylene	80 (176)	Alcohol and gasoline are harmless.	Most solvents are harmless.
PET	Polyethylene Terephthalate	75 (167)	Alcohol and gasoline are harmless.	Avoid dipping in water.
PMMA	Polymethyl Methacrylate	80 (176)	Alcohol is harmless if applied only for short time in small amounts.	Avoid dipping or immersing in alcohol, gasoline, solvents, etc.
POM	Polyoxymethylene (Polyacetal)	100 (212)	Alcohol and gasoline are harmless.	Most solvents are harmless.
PP	Polypropylene	80 (176)	Alcohol and gasoline are harmless.	Most solvents are harmless.
PPO	Modified Polyphenylene Oxide	100 (212)	Alcohol is harmless.	Gasoline is harmless if applied only for quick wiping to remove grease.
PS	Polystyrene	60 (140)	Alcohol and gasoline are harmless if applied only for short time in small amounts.	Avoid dipping or immersing in alcohol, gasoline, solvents, etc.
PUR	Polyurethane	80 (176)	Alcohol is harmless if applied only for very short time in small amounts (e.g., quick wiping to remove grease).	Avoid dipping or immersing in alcohol, gasoline, solvents, etc.
PVC	Polyvinylchloride (Vinyl)	80 (176)	Alcohol and gasoline are harmless if applied only for short time in small amounts (e.g., quick wiping to remove grease).	Avoid dipping or immersing in alcohol, gasoline, solvents, etc.
SAN	Styrene Acrylonitrile	80 (176)	Alcohol is harmless if applied only for short time in small amounts (e.g., quick wiping to remove grease).	Avoid dipping or immersing in alcohol, gasoline, solvents etc.
TPO	Thermoplastic Olefine	80 (176)	Alcohol is harmless. Gasoline is harmless if applied only for short time in small amounts.	Most solvents are harmless but avoid dipping in gasoline, solvents, etc.
TPU	Thermoplastic Polyurethane	80 (176)	Alcohol is harmless if applied only for short time in small amounts (e.g., quick wiping to remove grease).	Avoid dipping or immersing in alcohol, gasoline, solvents, etc.
TSOP	TOYOTA Super Olefine Polymer	80 (176)	Alcohol and gasoline are harmless.	Most solvents are harmless.
UP	Unsaturated Polyester	110 (233)	Alcohol and gasoline are harmless.	Avoid alkali.

*Temperatures higher than those listed here may result in material deformation during repair.

3. LOCATION OF PLASTIC BODY PARTS

Parts Name	Code
Radiator Grille	ABS
Front Bumper Cover	TSOP
Headlight	PC/PP/UP
Fog Light	PP/PC
Front Bumper Hole Cover	ABS
Outside Moulding	PVC
Body Rocker Moulding Panel	PP/TSOP
Outer Rear View Mirror	ABS
Outside Handle	PC
Back Door Outside Garnish	ABS
License Plate Light	PC
Back Light	ASA/PMMA
Rear Combination Light	PMMA/AAS
Rear Bumper Cover	TSOP

HINT:
- *Resin material differs with model.*
/ *Made up of 2 or more kinds of materials.*

HANDLING PRECAUTIONS ON RELATED COMPONENTS

1. BRAKE SYSTEM

The brake system is one of the most important safety components. Always follow the directions and notes given in section BR of the repair manual for the relevant model year when handling brake system parts.

NOTICE: When repairing the brake master cylinder or TRAC system, bleed the air out of the TRAC system.

2. DRIVE TRAIN AND CHASSIS

The drive train and chassis are components that can have great effects on the running performance and vibration resistance of the vehicle. After installing components in the sections listed in the table below, perform alignments to ensure correct mounting angles and dimensions. Particularly accurate repair of the body must also be done to ensure correct alignment.

HINT: Correct procedures and special tools are required for alignment. Always follow the directions given in the repair manual for the relevant model during alignment and section DI of this manual.

Component to be aligned	Section of repair manual for relevant model
Front Wheels	Suspension and Axle (SA) section
Rear Wheels	Suspension and Axle (SA) section

3. COMPONENTS ADJACENT TO THE BODY PANELS

Various types of component parts are mounted directly on or adjacently to the body panels. Strictly observe the following precautions to prevent damaging these components and the body panels during handling.

- Before repairing the body panels, remove their components or apply protective covers over the components.
- Before prying components off using a screwdriver or a scraper, etc., attach protective tape to the tool tip or blade to prevent damaging the components and the body paint.
- Before removing components from the outer surface of the body, attach protective tape to the body to ensure no damage to painted areas.

  HINT: Apply touch-up paint to any damaged paint surfaces.
- Before drilling or cutting sections, make sure that there are no wires, etc. on the reverse side.

4. ECU (ELECTRONIC CONTROL UNIT)

Many ECUs are mounted in this vehicle.
Take the following precautions during body repair to prevent damage to the ECUs.

- Before starting electric welding operations, disconnect the negative (-) terminal cable from the battery. When the negative (-) terminal cable is disconnected from the battery, memory of the clock and audio systems will be cancelled. So before starting work, make a record of the contents memorized by each memory system. Then when work is finished, reset the clock and audio systems as before.
  When the vehicle has tilt and telescopic steering, power seat and outside rear view mirror, which are all equipped with memory function, it is not possible to make a record of the memory contents.
  So when the operation is finished, it will be necessary to explain this fact to the customer, and request the customer to adjust the features and reset the memory.
- Do not expose the ECUs to ambient temperatures above 80˚C (176˚F).

  NOTICE: If it is possible the ambient temperature may reach 80˚C (176˚F) or more, remove the ECUs from the vehicle before starting work.
- Be careful not to drop the ECUs and not to apply physical shocks to them.

HOW TO USE THIS MANUAL

1. BODY PANEL REPLACEMENT THIS MANUAL

BP-34 **BODY PANEL REPLACEMENT**

Ⓐ **QUARTER PANEL (CUT)**
REPLACEMENT

Ⓑ 1. REMOVE QUARTER PANEL

(a) Cut and join the part at the location as shown below

Ⓒ

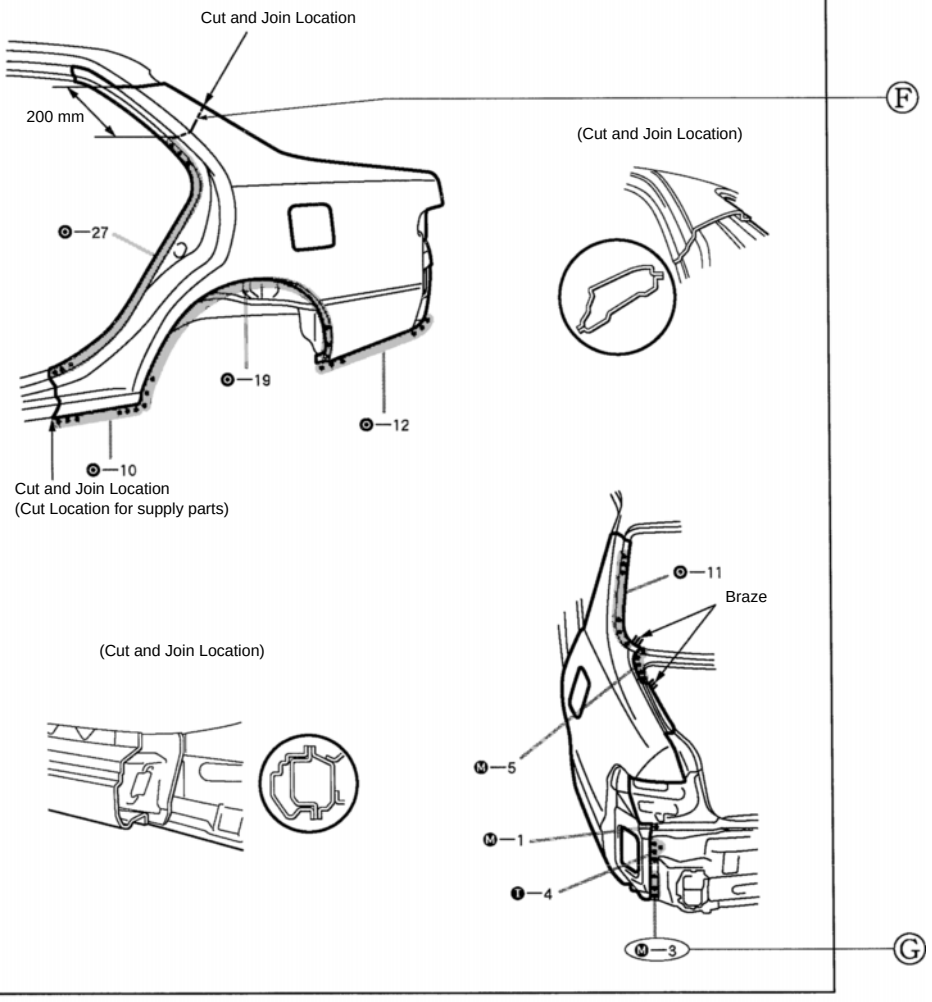

Ⓐ : **REPLACEMENT PARTS**
QUARTER PANEL (CUT)

- Replacement method
  - (ASSY) . . . . Assembly replacement
  - (CUT) . . . . . Major cutting (less than 1/2 of parts used)
  - (CUT-H) . . Half cutting (about 1/2 parts used)
  - (CUT-P) . . . Partial cutting (most of parts used)
- Replacement Parts

Ⓑ : **REMOVAL DIAGRAM**
Describes in detail removal of the damaged parts involving repair by cutting.

Ⓒ : **REMOVAL GUIDE**
Provides additional information to more efficiently help you perform the removal.

F10113

2. INSTALL QUARTER PANEL

HINT:

Inspect the fitting of the rear door , luggage compartment door and rear combination light, etc., before welding, since this affects the appearance of the finish, (a) Before temporarily installing the new parts, apply body sealer to the wheel arch.

HINT:

- *Apply body sealer about 5 mm (0.20 in) from the flange, avoiding any oozing.*
- *Apply sealer evenly, about 3 - 4 mm (0.12 - 0.16 in.) in diameter.*
- *For other sealing points, refer to section PC.*

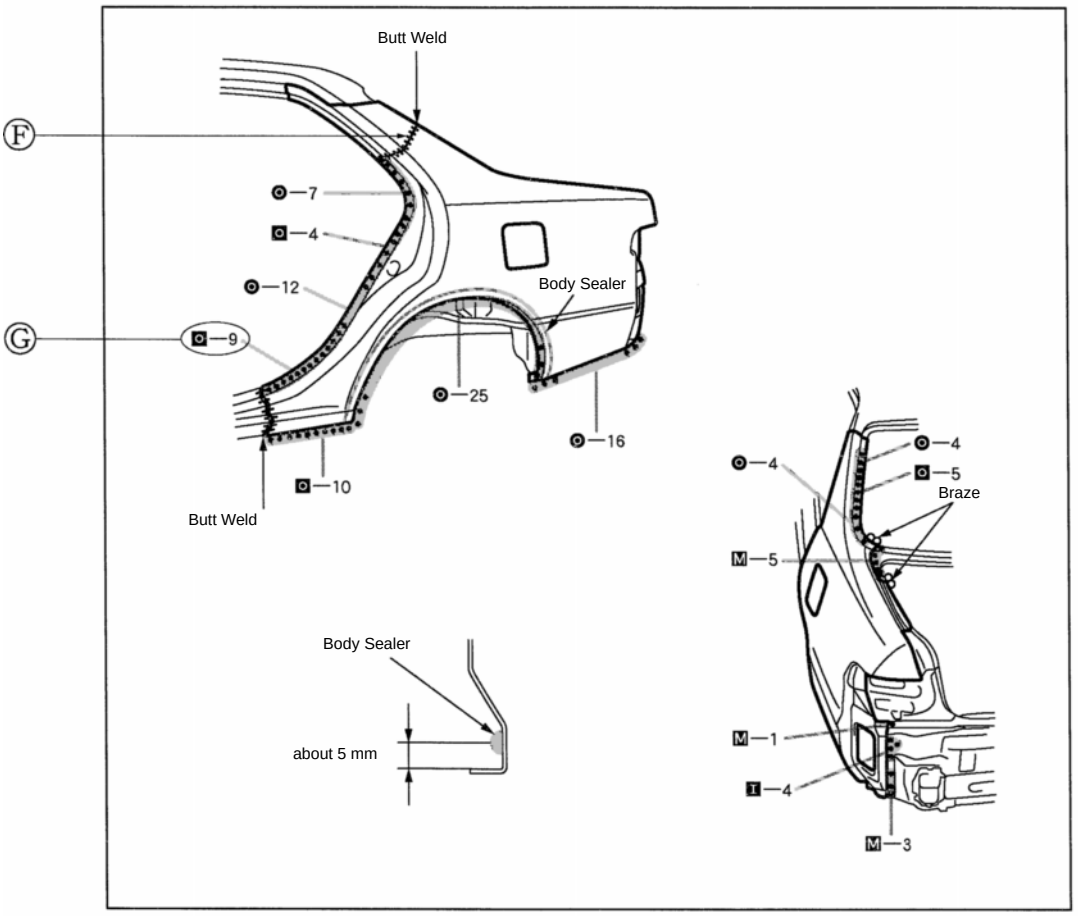

3. MEASURING THE OPENING PORTION DIMENSIONS (See page BP-XX)
4. APPLYING SEALER TO THE INSIDE OF THE VEHICLE (See page PC-XX)
5. APPLYING SEALER TO THE REAR, LUGGAGE COMPARTMENT (Seepage PC-XX)
6. CHARGING THE POLYURETHANE FOAM (See page PC-XX)
7. APPLYING ANTI-RUST AGENT

(a) After applying the top coat layer, apply the anti-rust agent to the inside of the necked section structural weld spots.

Ⓓ : **INSTALLATION GUIDE**
Provides additional information to more efficiently help you perform the installation.

Ⓔ : **INSTALLATION DIAGRAM**
Describes in detail installation of the new parts involving repair by welding and / or cutting, but excluding painting

Ⓕ : **SYMBOLS**
See page SS-7 .

Ⓖ : **ILLUSTRATION OF WELD POINTS**
Weld method and panel position symbols.
See page SS-8 .

F10114A

2. SYMBOLS

The following symbols are used in the welding diagrams in section BP of this manual to indicate cutting areas and the types of weld required.

SYMBOLS	MEANING	ILLUSTRATION
	SAW CUT OR ROUGH CUT	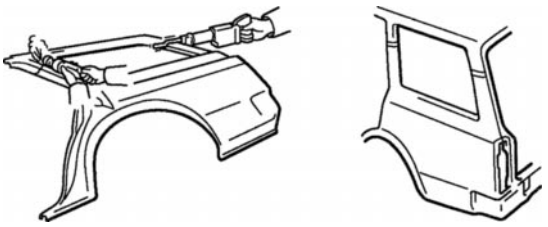
	REMOVE BRAZE	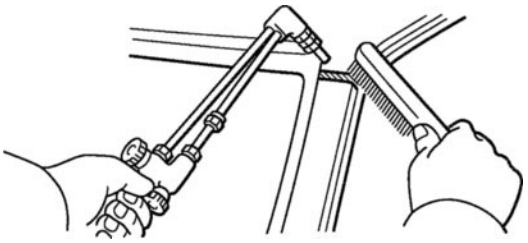
 	WELD POINTS SPOT WELD OR MIG PLUG WELD (See Page SS-8)	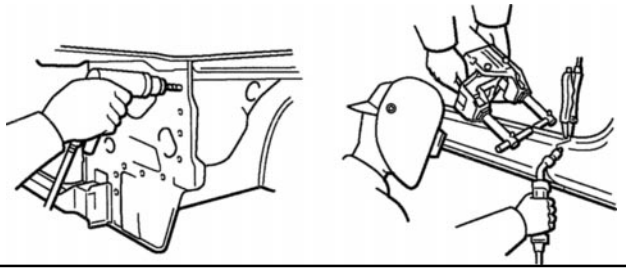
	CONTINUOUS MIG WELD (BUTT WELD OR TACK WELD)	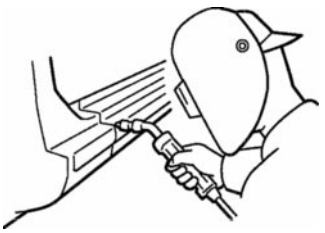
	BRAZE	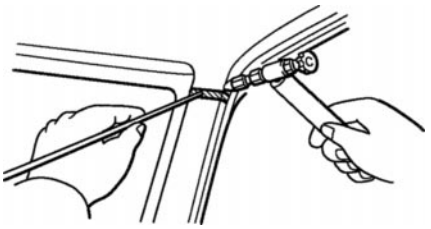
	BODY SEALER	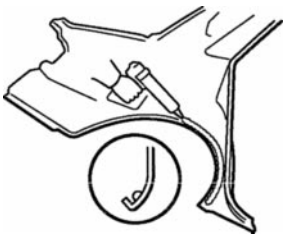

F10005A

3. ILLUSTRATION OF WELD POINT SYMBOLS
EXAMPLE:

REMOVAL

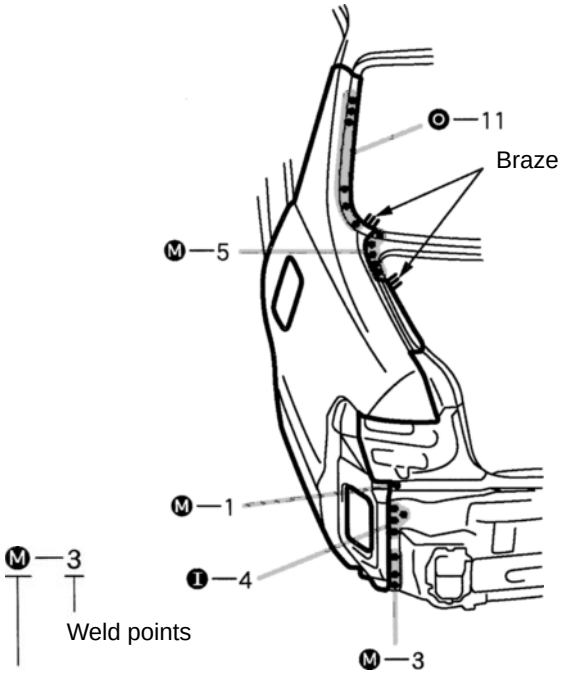

Remove weld point and panel position

INSTALLATION

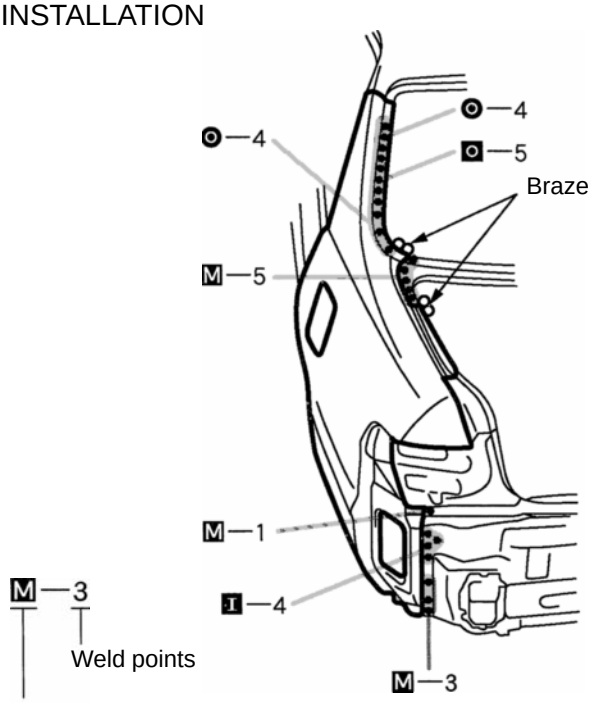

Weld method and panel position

SYMBOL	MEANING	ILLUSTRATION
O M I	Remove Weld Points	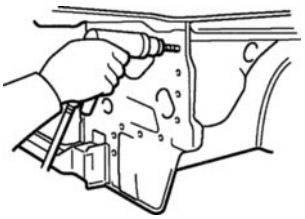
O	(Outside)	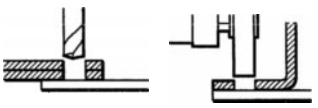
M	(Middle)	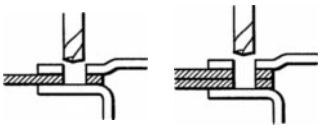
I	(Inside)	

HINT: Panel position symbols are as seen from the working posture.

SYMBOL	MEANING	ILLUSTRATION
O M I	Spot Weld	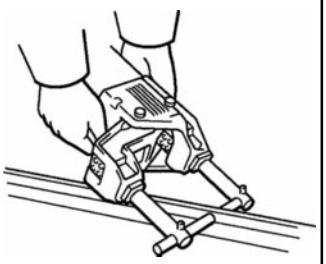
O M I	Mig Plug Weld	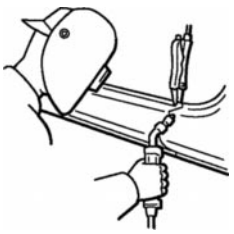
+	Spot MIG Weld	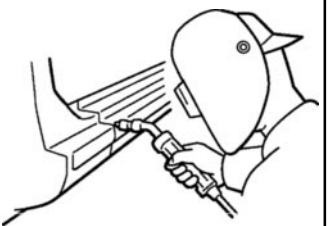

F10005A

PRECAUTIONS FOR REPAIRING BODY STRUCTURE PANELS

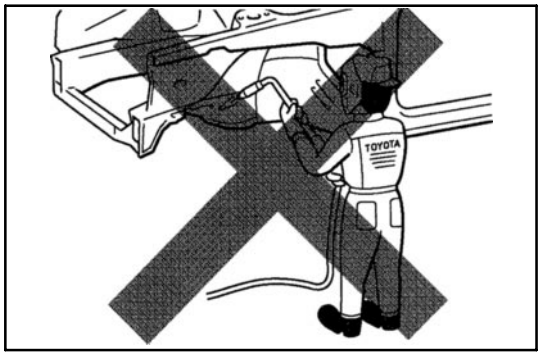

1. HEAT REPAIR FOR BODY STRUCTURE PANELS

Toyota prohibits the use of the heat repair method on body structure panels when repairing a vehicle damaged in a collision.

Panels that have high strength and rigidity, as well as a long life span for the automobile body are being sought after.

At Toyota, in order to fulfill these requirement, we use high tensile strength steel sheets and rust preventive steel sheets on the body.

High tensile steel sheets are made with alloy additives and a special heat treatment in order to improve the strength.

To prevent the occurrence of rust for a long period of time, the surface of the steel is coated with a zinc alloy.

If a body structure parts are heat repaired with an acetylene torch or other heating source, the crystalline organization of the steel sheet will change and the strength of the steel sheet will be reduced.

The ability of the body to resist rust is significantly lowered as well since the rust resistant zinc coating is destroyed by heat and the steel sheet surface is oxidized.

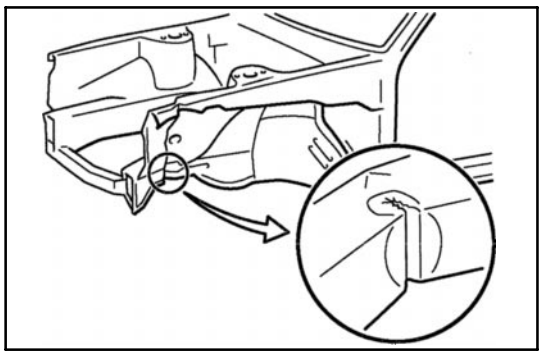

2. STRUCTURE PANEL KINKS

A sharp deformation angle on the panel that cannot be returned to its original shape by pulling or hammering is called a kink.

Since structure parts were designed to exhibit a 100% performance when they were in their original shape, if they are deformed in an accident, or if the deformed parts are repaired and reused, they become unable to exhibit the same performance as intended in the design.

It is necessary to replace the part where the kink has occurred.

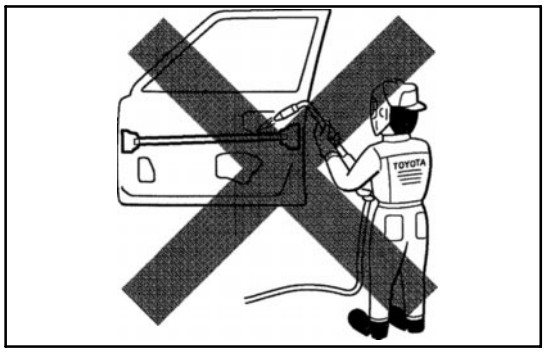

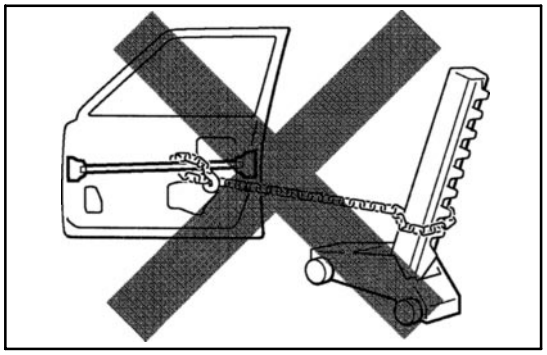

3. IMPACT BEAM REPAIR

The impact beam and bracket are necessary and important parts in maintaining a survival space for passengers in a side collision.

For impact beam, we use special high tensile strength steel. The high tensile strength steel maintains its special crystalline organization by heat treatment or alloy additives.

Since these parts were designed to exhibit a 100% performance when they were in their original shape, if they are deformed in an accident, or if the deformed parts are repaired and reused, they become unable to exhibit the same performance as intended in the design.

It is necessary to replace the door assembly when impact beam or bracket is damaged.

PROPER AND EFFICIENT WORK PROCEDURES

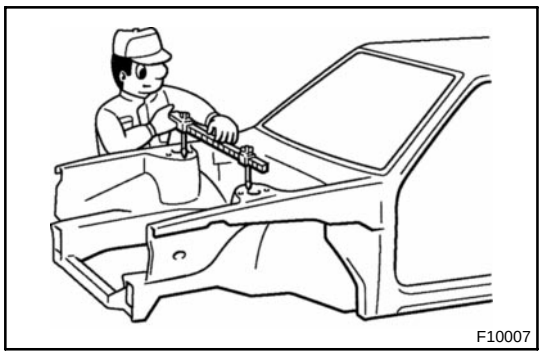
F10007

1. REMOVAL

(a) PRE-REMOV AL MEASURING

(1) Before removal or cutting operations, take measurements in accordance with the dimension diagram. Always use a puller to straighten a damaged body or frame.

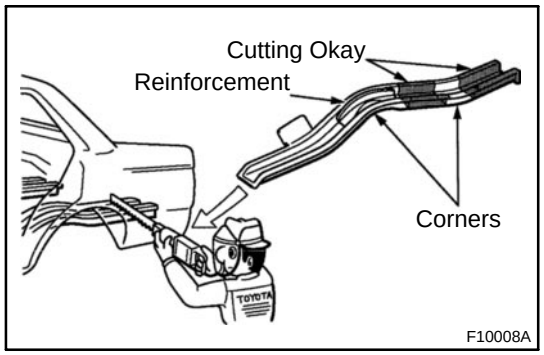

F10008A

(b) CUTTING AREA

(1) Always cut in a straight line and avoid reinforced area.

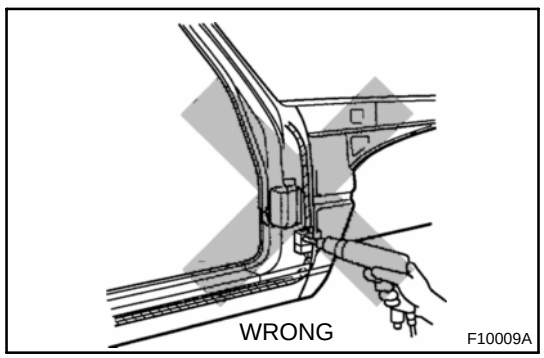

F10009A

(c) PRECAUTIONS FOR DRILLING OR CUTTING

(1) Check behind any area to be drilled or cut to insure that there are no hoses, wires, etc., that may be damaged.

HINT: See "Handling Precautions on Related Components" on page SS-14 .

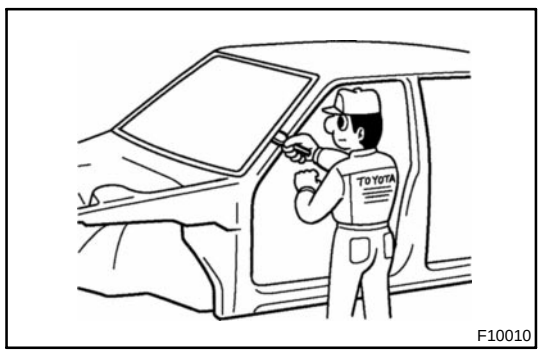

F10010

(d) REMOVAL OF ADJACENT COMPONENTS

(1) When removing adjacent components, apply protective tape to the surrounding body and your tools to prevent damage.

HINT: See "Handling Precautions on Related Components" on page SS-14 .

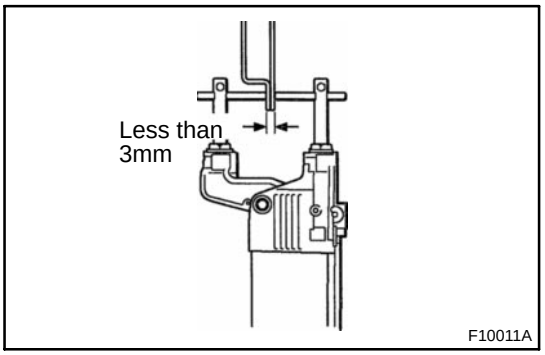

2. PREPARATION FOR INSTALLATION

(a) SPOT WELD POINTS

(1) When welding panels with a combined thickness of over 3 mm (0.12 in.), use a MIG (Metal Inert Gas) welder for plug welding.

HINT: Spot welding will not provide sufficient durability for panels over 3 mm (0.12 in.) thick.

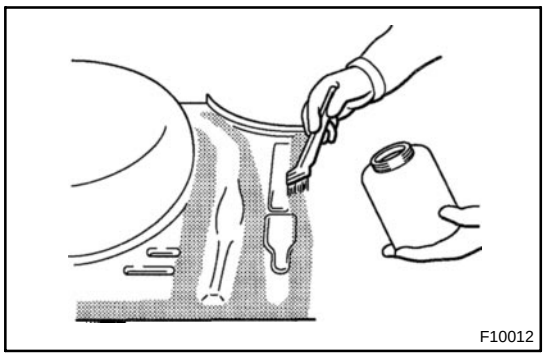

(b) APPLICATION OF WELD-THROUGH PRIMER (SPOT SEALER)

(1) Remove the paint from the portion of the new parts and body to be welded, and apply weld-through primer.

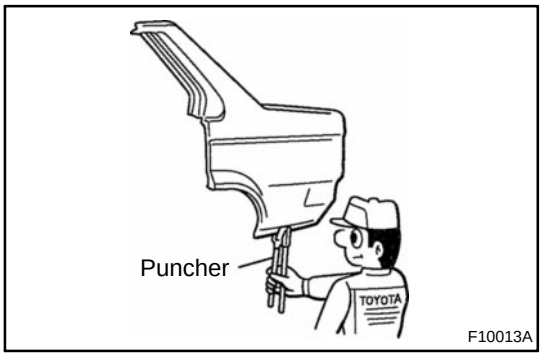

(c) MAKING HOLES FOR PLUG WELDING

(1) For areas where a spot welder cannot be used, use a puncher or drill to make holes for plug welding.

REFERENCE: mm (in.)

Thickness of welded portion	Size of plug hole
1.0 (0.04) under	5 (0.20) ϕ over
1.0 (0.04) - 1.5 (0.06)	6.4 (0.26) ϕ over
1.5 (0.06) over	8 (0.31) ϕ over

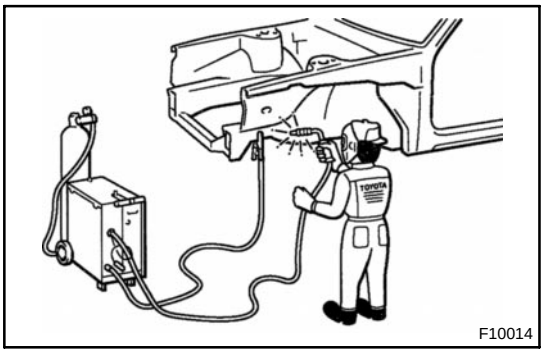

(d) SAFETY PRECAUTIONS FOR ELECTRICAL COMPONENTS

(1) When welding, there is a danger that electrical components will be damaged by the electrical current flowing through the body.

(2) Before starting work, disconnect the negative terminal of the battery and ground the welder near the welding location of the body.

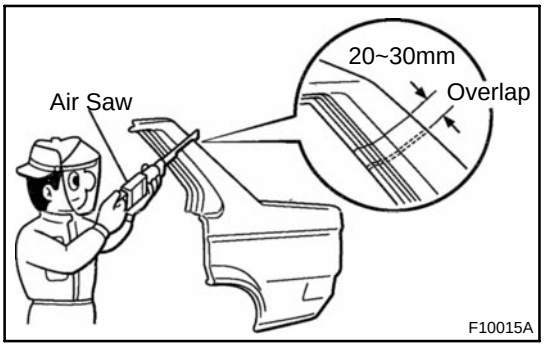

(e) ROUGH CUTTING OF JOINTS

(1) For joint areas, rough cut the new parts, leaving 20 - 30 mm (0.79 - 1.18 in.) overlap.

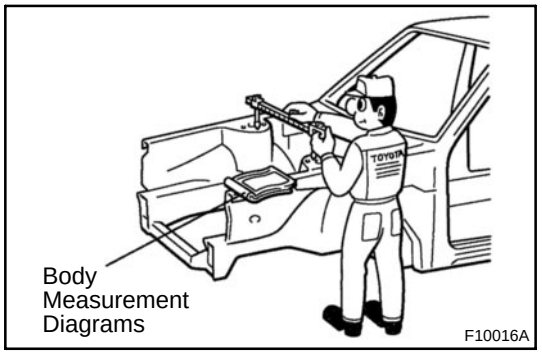

3. INSTALLATION

(a) PRE-WELDING MEASUREMENTS

(1) Always take measurements before installing underbody or engine components to insure correct assembly. After installation, confirm proper fit.

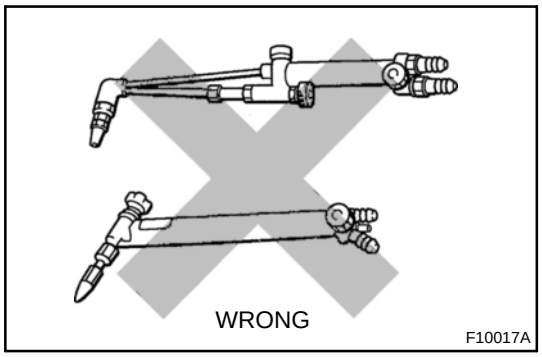

(b) WELDING PRECAUTIONS

(1) The number of welding spots should be as follows.
Spot weld: 1.3 X No. of manufacturer's spots.
Plug weld: More than No. of manufacturer's plugs.

(2) Plug welding should be done with a MIG (Metal Inert Gas) welder. Do not gas weld or braze panels at areas other than specified.

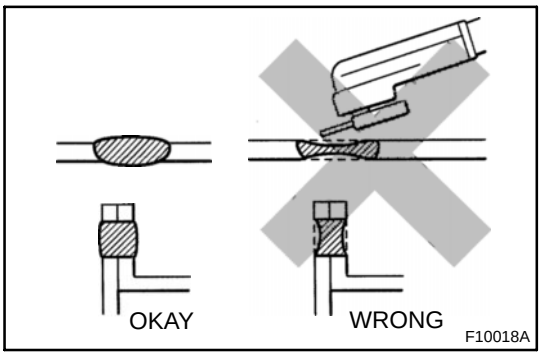

(c) POST-WELDING REFINISHING

(1) Always check the welded spots to insure they are secure.

(2) When smoothing out the weld spots with a disc grinder, be careful not to grind off too much as this would weaken the weld.

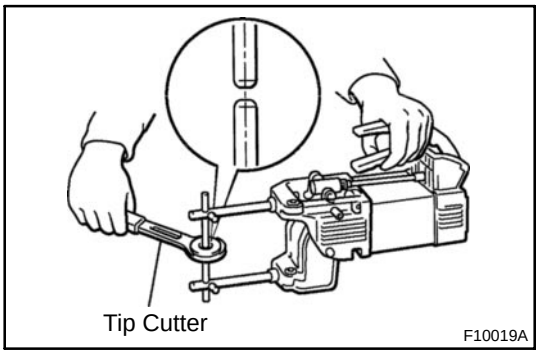

(d) SPOT WELD LOCATIONS

(1) Try to avoid welding over previous spots.

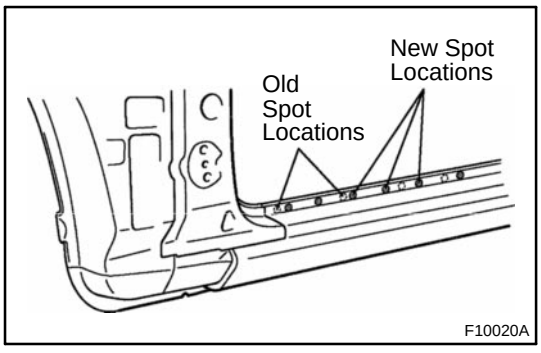

(e) SPOT WELDING PRECAUTIONS

(1) The shape of the welding tip point has an effect on the strength of the weld.

(2) Always insure that the seams and welding tip are free of paint.

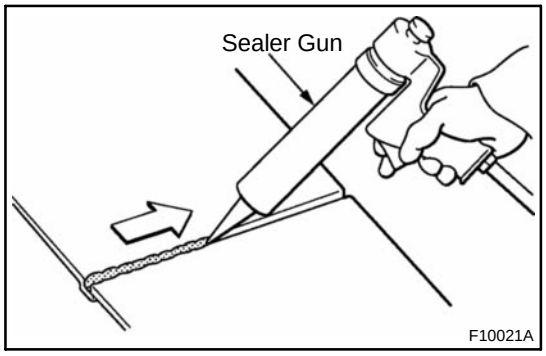

4. ANTI-RUST TREATMENT

(a) BODY SEALER APPLICATION

(1) For water-proofing and anti-corrosion measures, always apply the body sealer to the body panel seams and hems of the doors, hoods, etc.

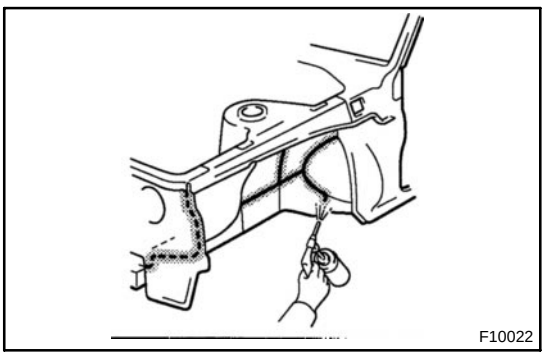

(b) UNDERCOAT APPLICATION

(1) To prevent corrosion and protect the body from damage by flying stones, always apply sufficient undercoat to the bottom surface of the under body and inside of the wheel housings.

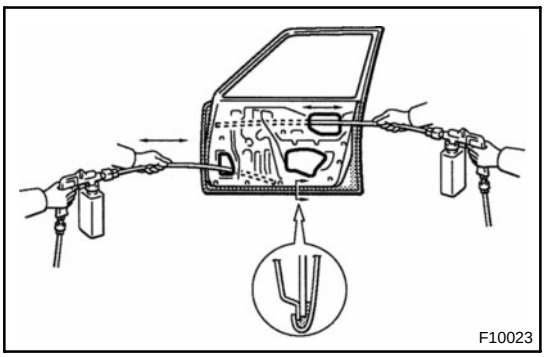

5. ANTI-RUST TREATMENT AFTER PAINTING PROCESS

(a) ANTI-RUST AGENT (WAX) APPLICATION

(2) To preserve impossible to paint areas from corrosion, always apply sufficient anti-rust agent (wax) to the inside of the hemming areas of the doors and hoods, and around the hinges, or the welded surfaces inside the boxed cross-section structure of the side member, body pillar, etc.

6. ANTI-RUST TREATMENT BY PAINTING

REFERENCE:

Painting prevents corrosion and protect the sheet metal from damage. In this section, anti-chipping paint only for anti-corrosion purpose is described.

(a) ANTI-CHIPPING PAINT

(1) To prevent corrosion and protect the body from damage by flying stones, etc., apply anti-chipping paint to the rocker panel, wheel arch areas, valance panel, etc.

HINT:
Depending on the model or the application area, there are cases where the application of anti-chipping paint is necessary before the second coat or after the top coat.

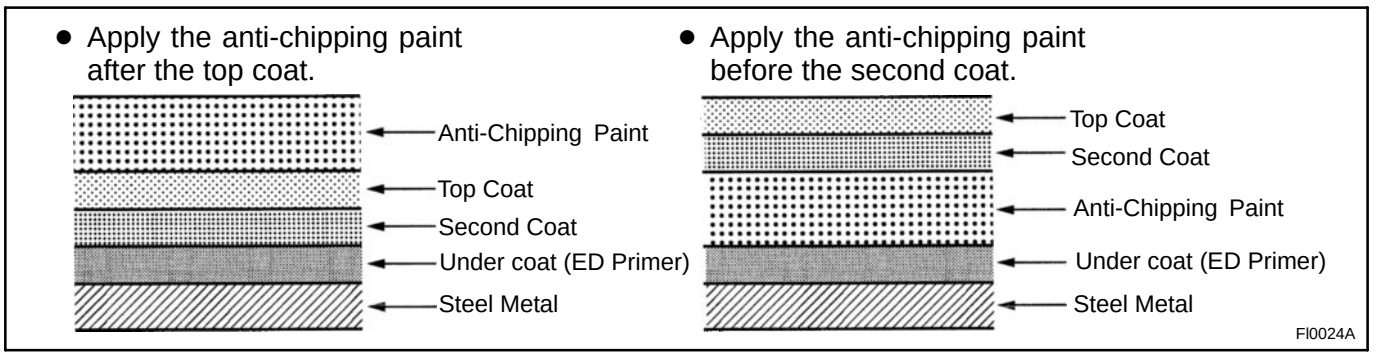

VIEWS OF THIS TEXT

Scope of the repair work explanation

- This text explains the welding panel replacement instructions from the vehicle's white body condition. We have abbreviated the explanations for the removal and reinstallation of the equipment parts up to the white body condition and for the installation, inspection, adjustment and final inspection of equipment parts after replacing the weld panel.

Section categories

- Each section has been divided as shown below.

Section Title	Contents	Examples
INTRODUCTION	Explanation of general body repair. Views of weld panel replacement instructions.	Cautionary items. Views of weld panel replacement instructions.
BODY PANEL REPLACEMENT	Body aligning measurements and instructions for replacing the weld panels from the white body condition, from which bolted parts have been removed, with individual supply parts.	Front side member replacement. Quarter panel replacement. Dimension diagrams.
PAINT ●COATING	Scope and type of anti-rust treatment, etc. together with weld panel replacement.	Under coat. Body sealer.

Abbreviation of contents in this text.

- The following essential procedures have been abbreviated. When actually working, conduct this work properly.

  (1) Jack and lift operations.

  (2) Clean and wash removed parts, if necessary.

  (3) Visual inspection.

BODY PANEL UNDERCOATING AREAS

HINT:

1. *First wipe off any dirt, grease or oil with a rag soaked in a grease, wax and silicone remover.*
2. *Cover the surrounding areas with masking paper to avoid coating unnecessary areas. If other areas are accidently coated, wipe off the coating immediately.*
3. *Apply the first coating of undercoat to all welded areas and panel joints, then apply a second coat over the entire area.*
4. *Do not coat parts which become hot, such as the tailpipe, or moving parts, such as the propeller shaft.*
5. *Besides the locations described below, apply undercoating to all weld points under the body to insure corrosion prevention.*
6. *Be sure to seal the edge of the flange of the member and bracket with undercoating.*
7. *If undercoat is damaged by peeling, cracks, etc., be sure to repair as necessary.*
8. *Before the undercoat apply sealer allowing rust prevention to be attained.*

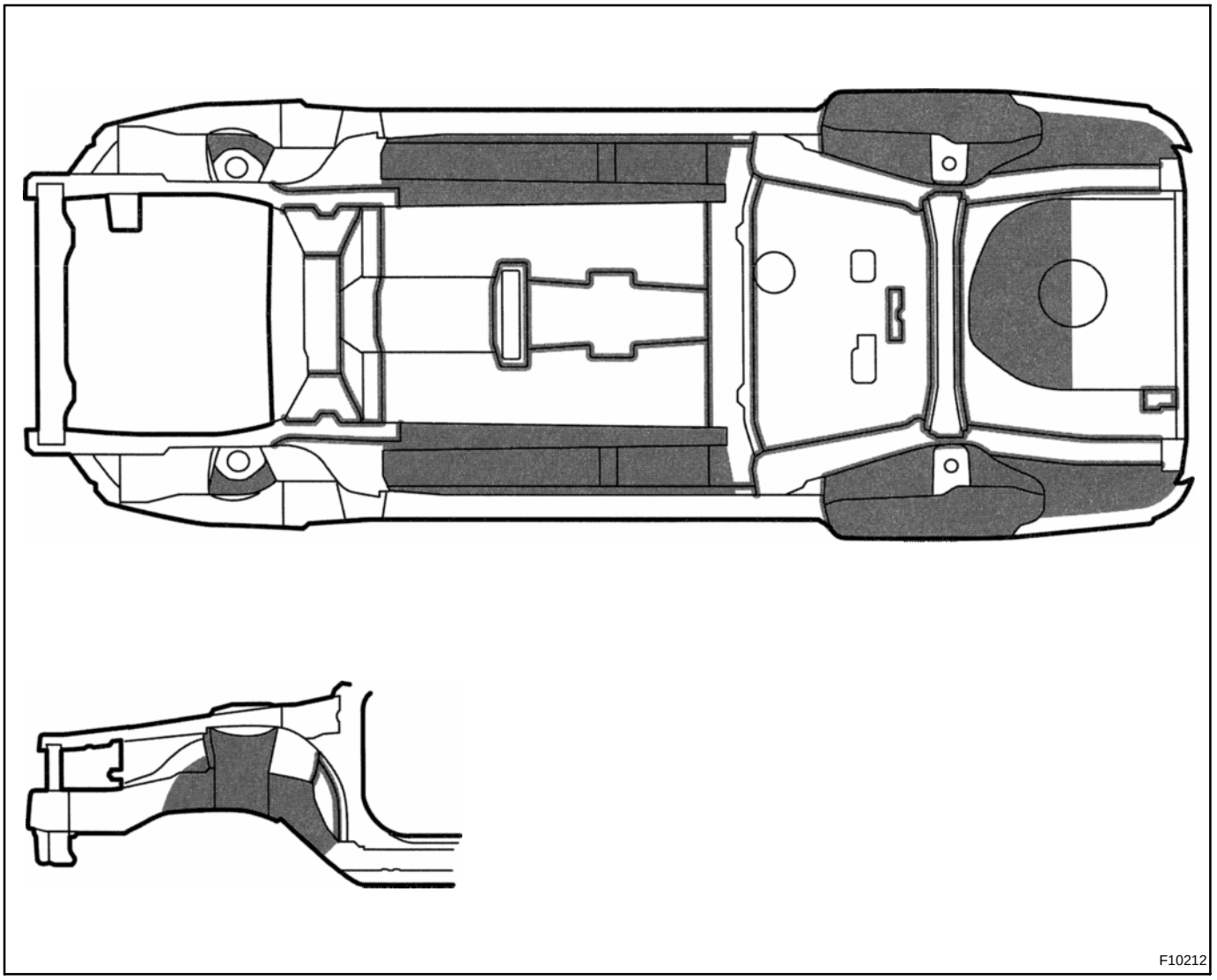

REFERENCE: Referring to the notes above, undercoating should be applied according to the specifications for your country.

BODY PANEL ANTI-RUST AGENT (WAX) APPLICATION AREAS

HINT:

1. *Whenever adjusting the doors and hoods, apply anti-rust agent (wax) around the hinges.*
2. *Even if partially repairing a part, apply anti-rust agent (wax) over the entire application area of the part.*
3. *Wipe off the anti-rust agent immediately with a rag soaked in a grease, wax and silicone remover, if accidently applied to other areas.*

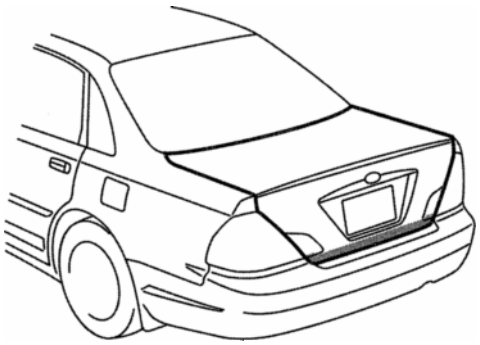

Hood Hinge

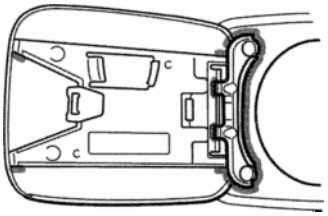

Fuel Filler Opening Lid Hinge



Luggage Compartment Door

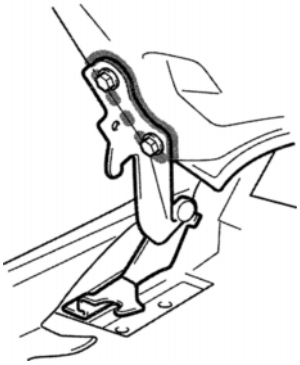

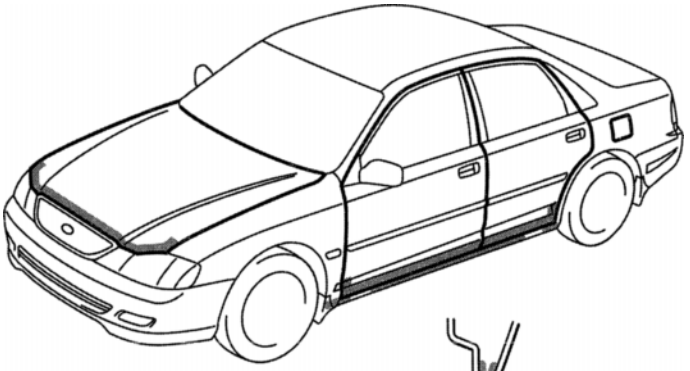



Hood



Door

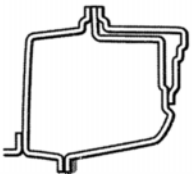

Rocker Panel

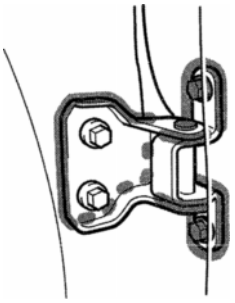

Front Door Lower Hinge

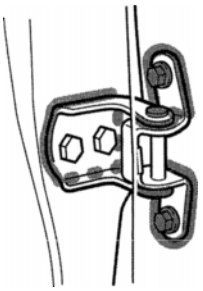

Front Door Upper Hinge & Rear Door Hinge

F10213

BODY PANEL ANTI-CHIPPING PAINT APPLICATION AREAS

HINT:

1. *Anti-chipping paint should be applied to some areas before the second coat and to others after the top coat.*
2. *If other areas are accidentally coated, wipe of the paint immediately with a rag soaked in grease, wax and silicone remover.*

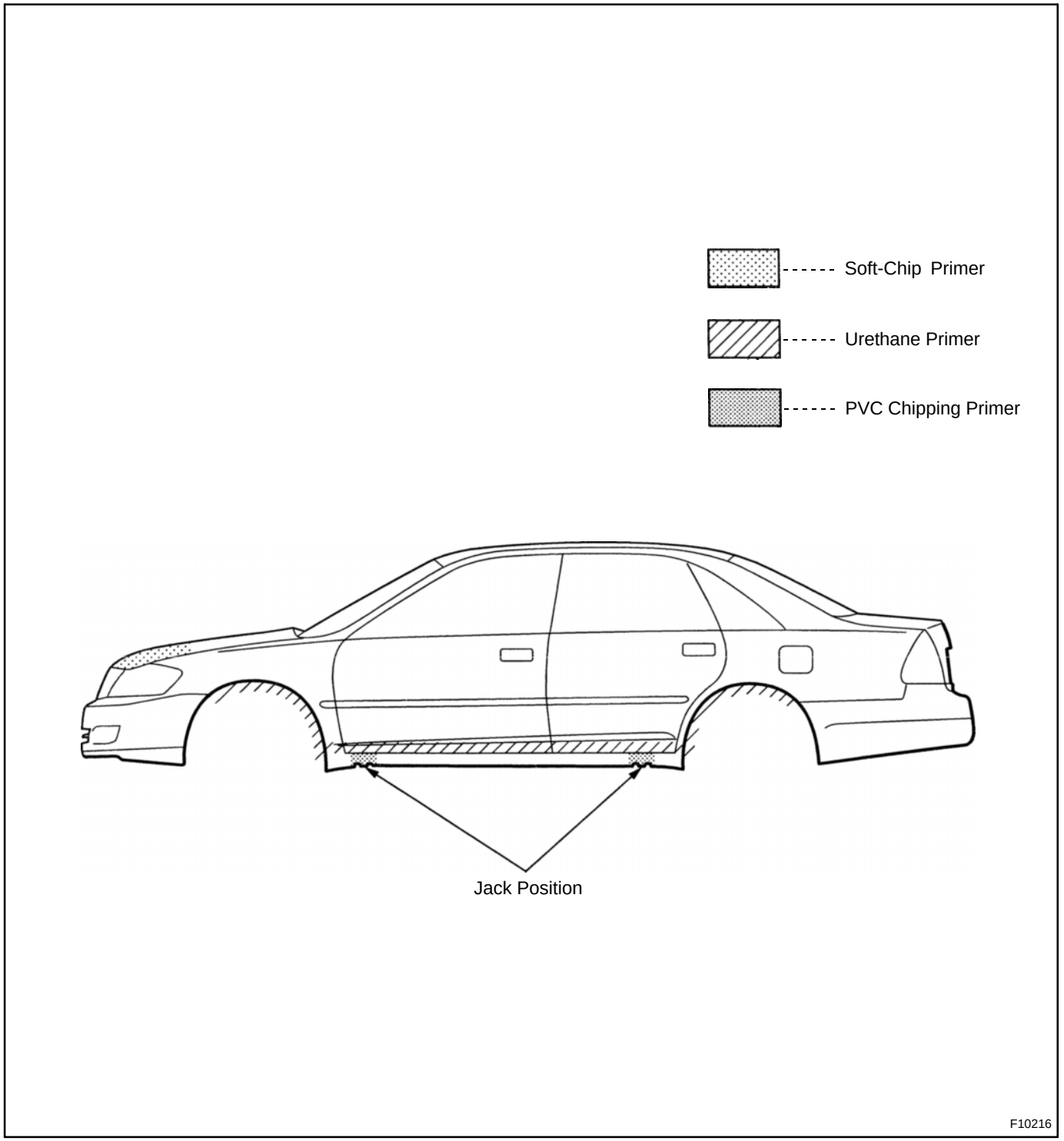

BODY PANEL SEALING AREAS

HINT:

1. *Prior to applying body sealer, clean the area with a rag soaked in a grease, wax and silicone remover.*
2. *If weld-through primer was used, first wipe off any excess and coat with anti-corrosion primer before applying body sealer.*
3. *Wipe off excess body sealer with a rag soaked in a grease, wax and silicone remover.*
4. *If body sealer is damaged by peeling, cracks, etc., be sure to repair as necessary.*

1. ENGINE COMPARTMENT

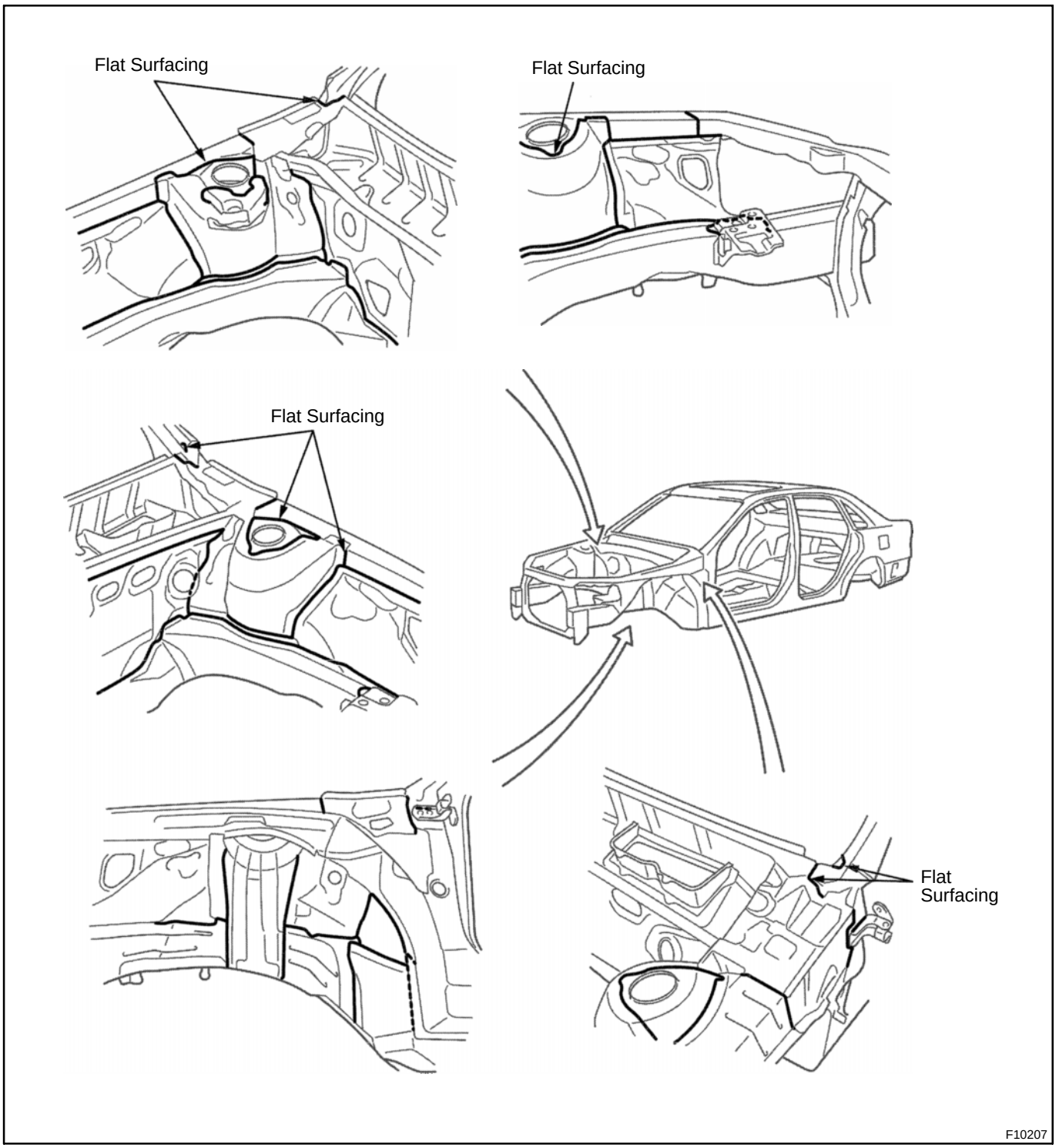

2. INSIDE

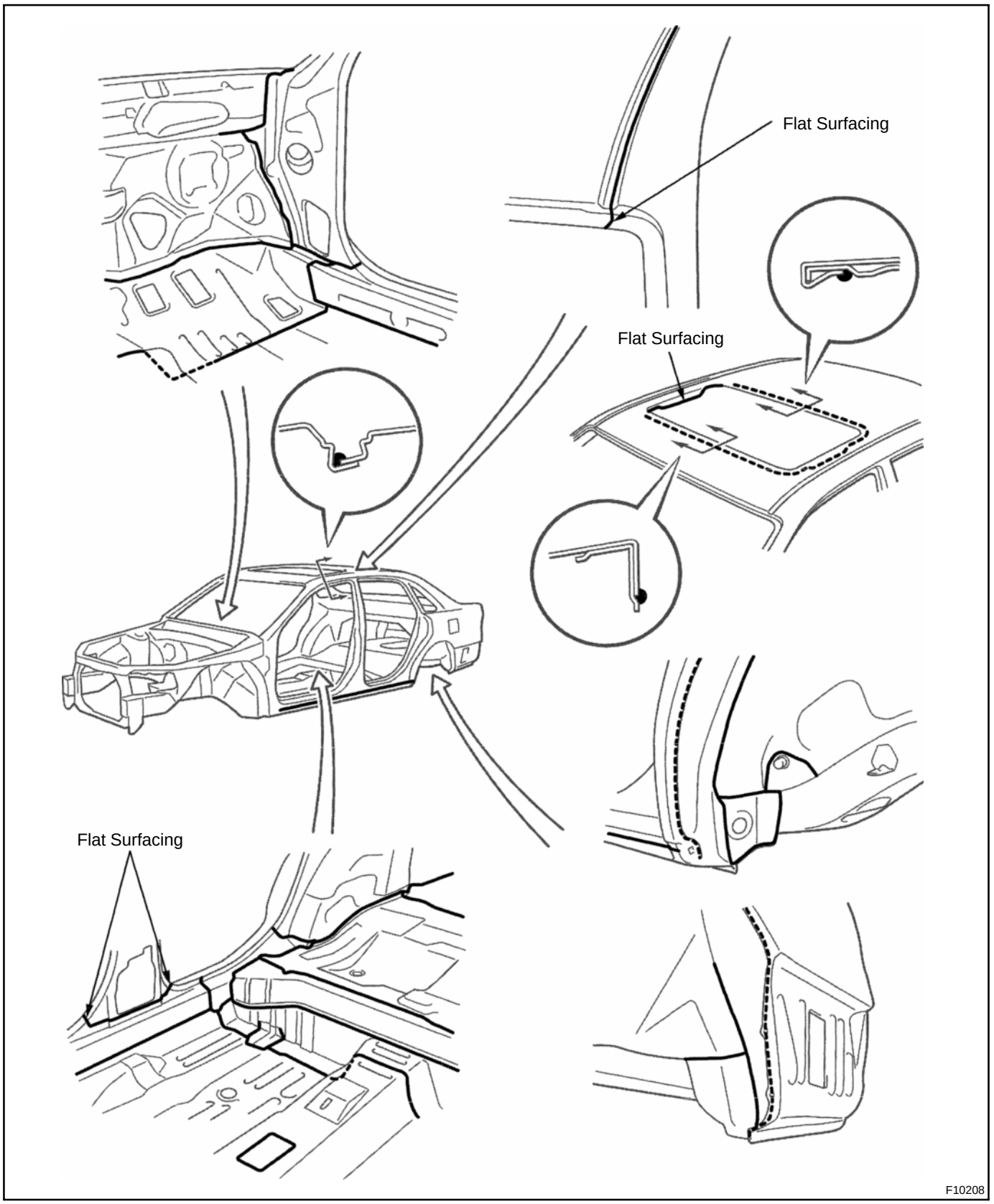

3. REAR LUGGAGE COMPARTMENT

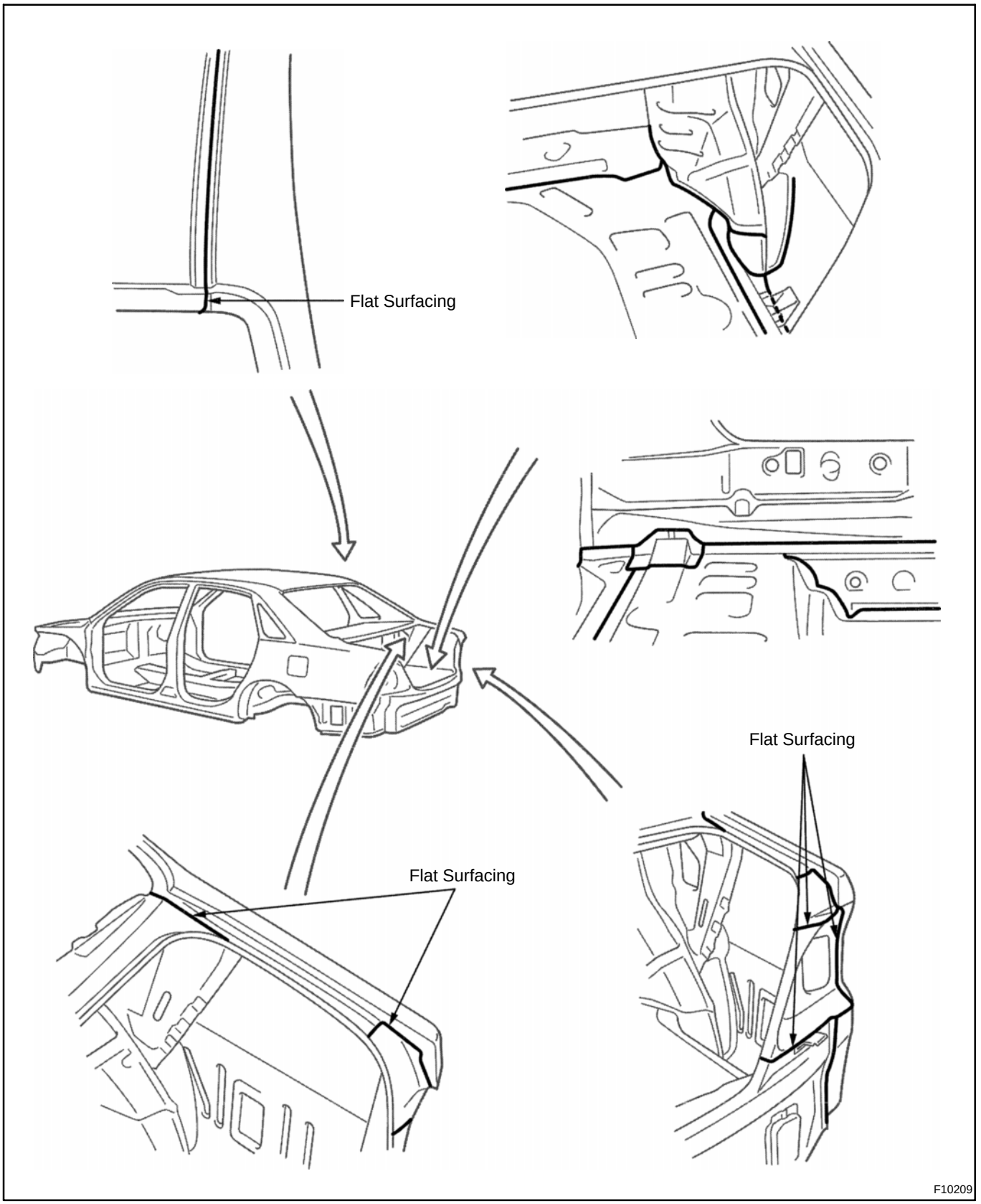

4. DOOR PARTS

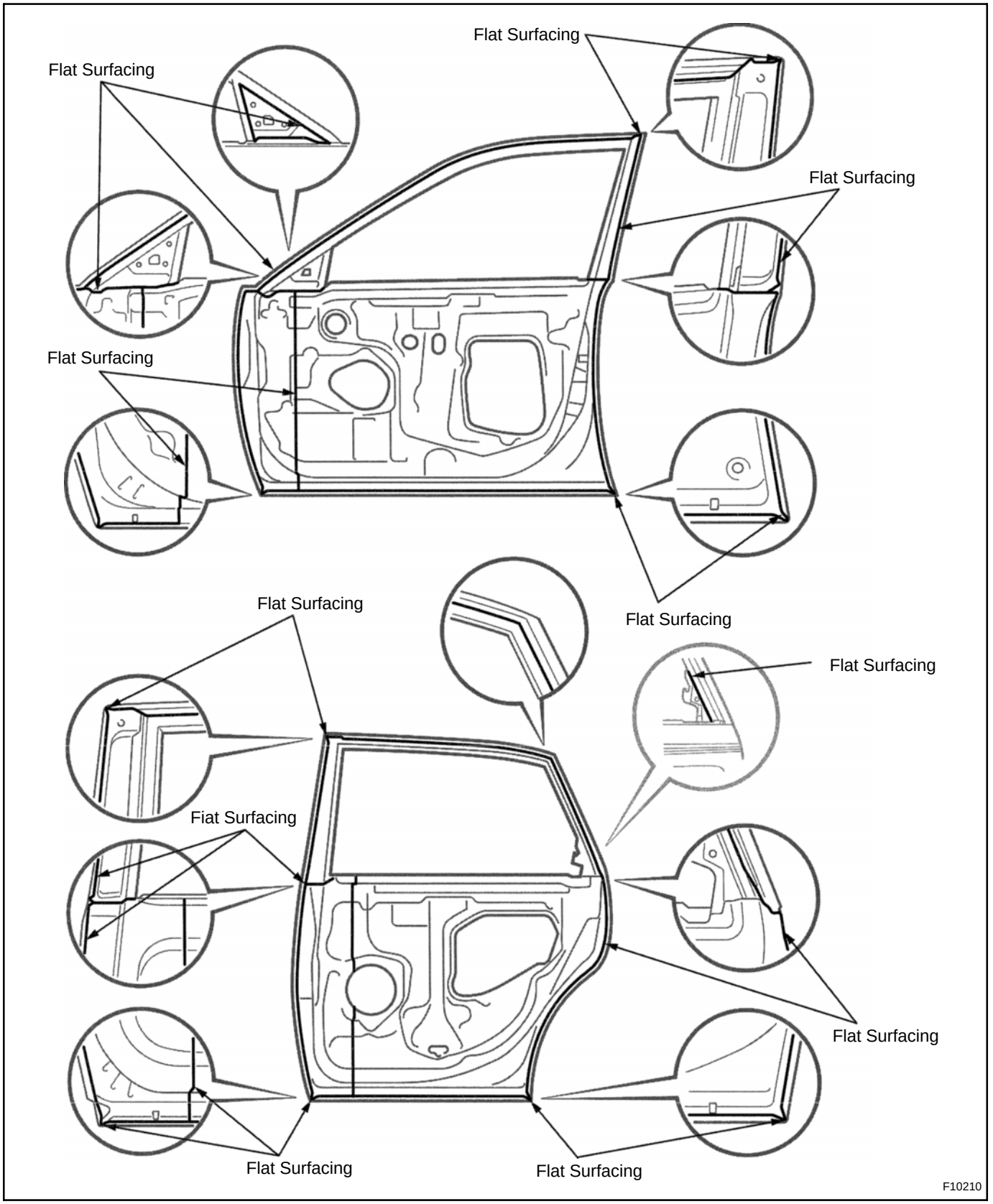
Flat Surfacing
Flat Surfacing
Flat Surfacing
Flat Surfacing
Flat Surfacing
Flat Surfacing
Flat Surfacing
Fiat Surfacing
Flat Surfacing
Flat Surfacing
Flat Surfacing
F10210

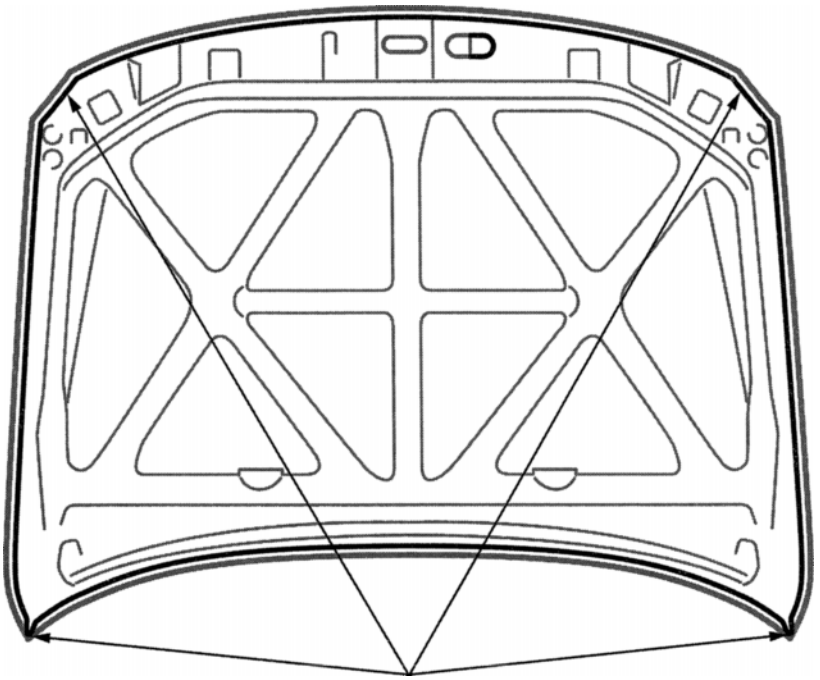

Flat Surfacing

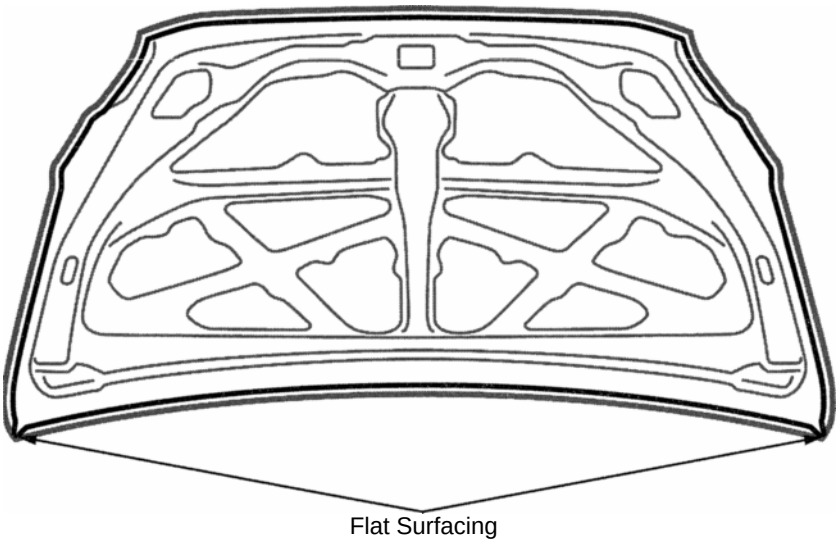

Flat Surfacing

F10211

FOAMED MATERIAL APPLICATION AREAS

The sections shown in the figure below are filled with foamed material to provide noise insullation. After repairing these sections or their peripheries, refill with foamed materials.

HINT:

1. *Use the service holes located on the reverse side of the body panel to refill with foamed materials.*
2. *When handling foamed material, follow the directions of the material's manufacturer.*

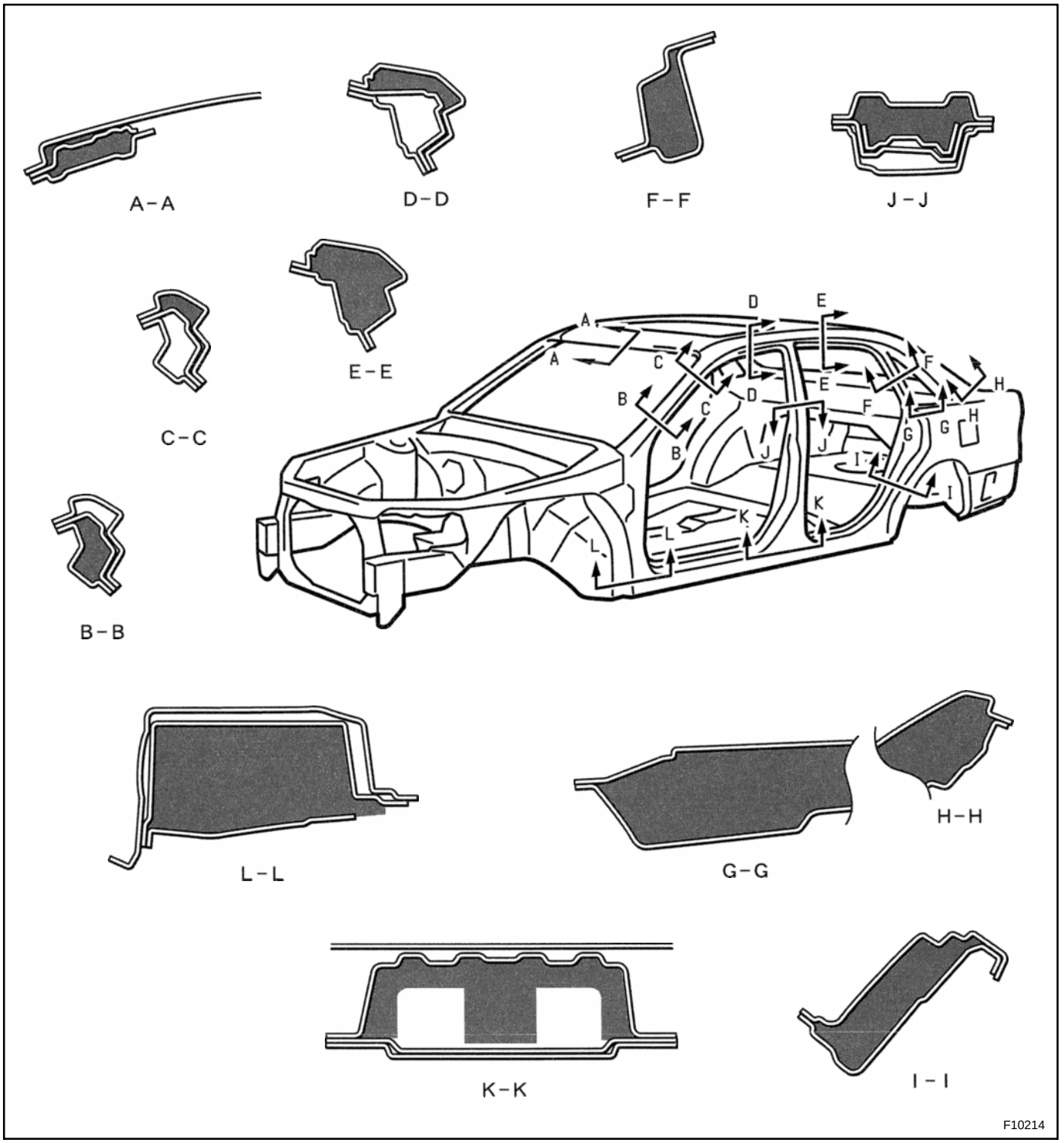

SILENCER SHEET INSTALLATION AREAS

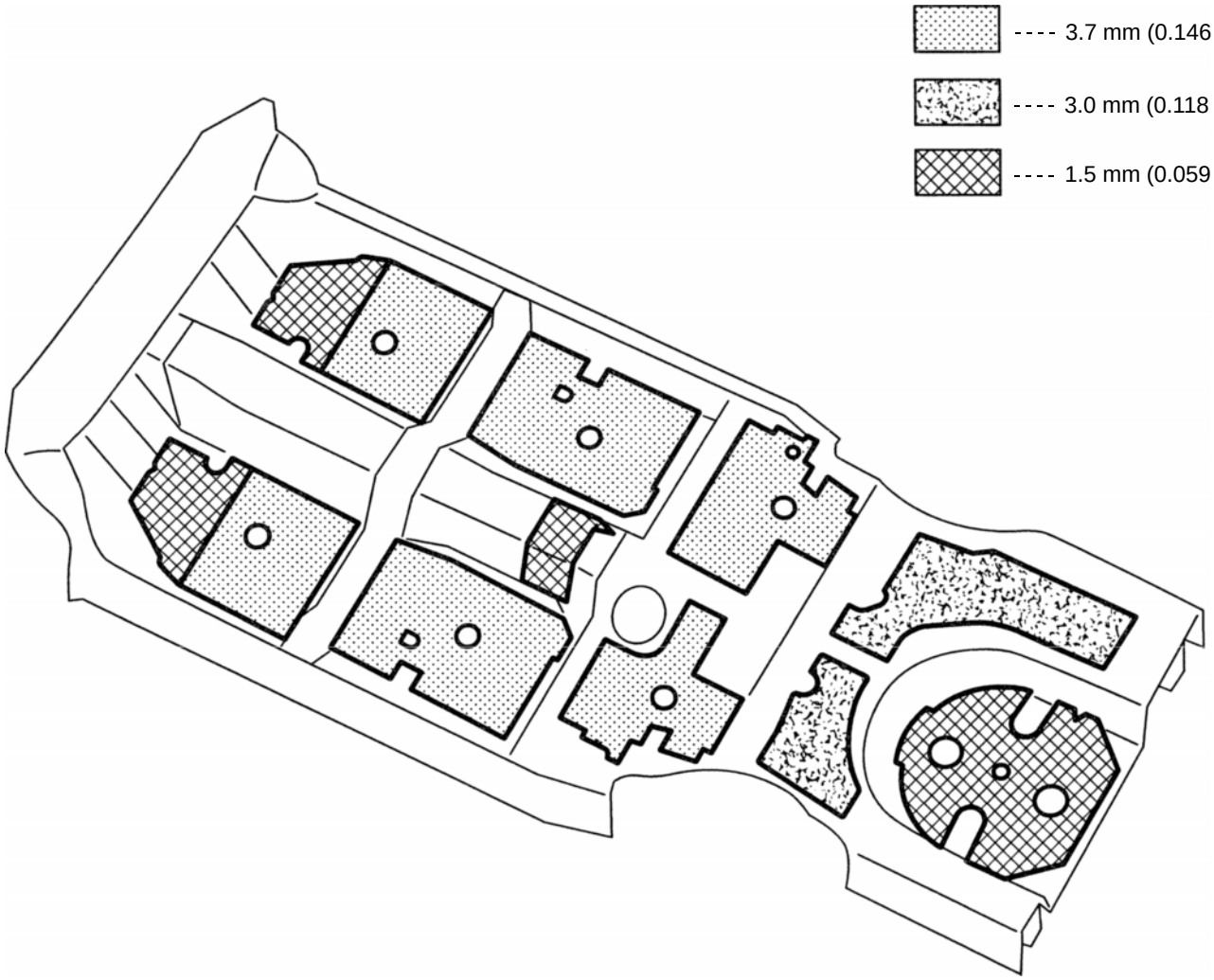

F10215

BODY DIMENSION DRAWINGS

ENGINE COMPARTMENT

(Three-Dimensional Distance)

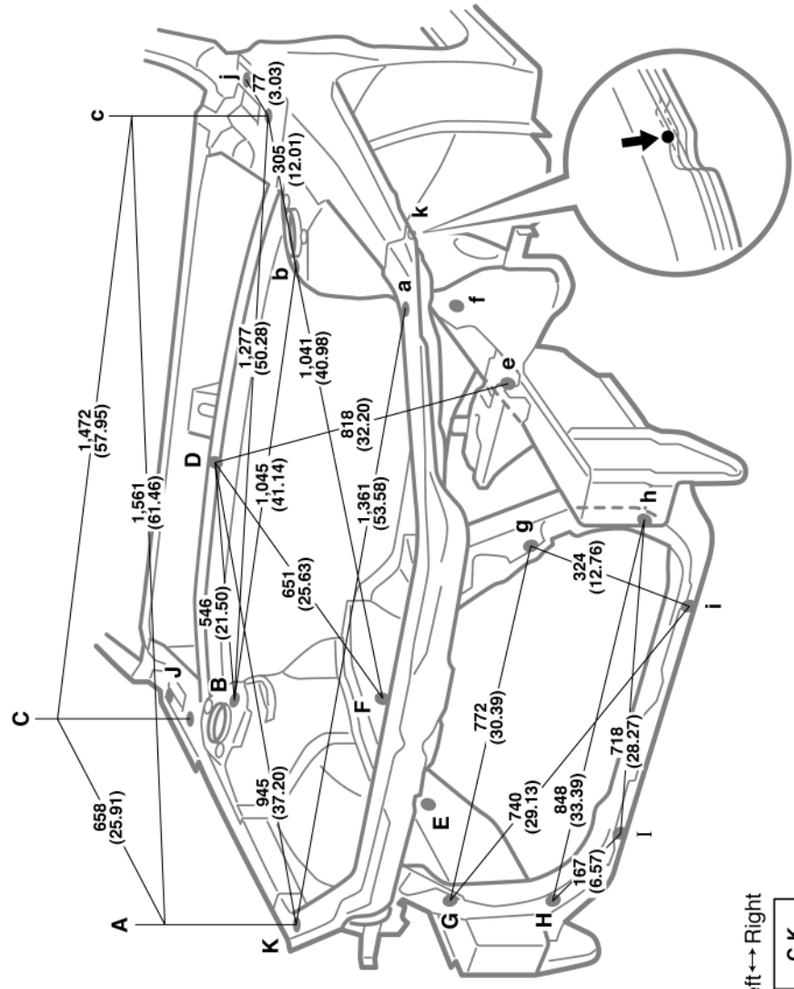

HINT: For symbols,capital letters indicate right side of vehicle, small letters indicate left side of vehicle(Seen from rear).

mm (in.)

Vehicle Dimensions Left↔ Right

K-k
1,524 (60.00)

C-K or c-k
666 (26.22)

C-K or c-k
1,639 (64.53)

Symbol	Name	Hole dia.
A, a	Front fender installation nut - front	6 (0.24) nut
B, b	Front spring support hole - inner	11 (0.43)
C, c	Front fender installation nut - rear	6 (0.24) nut
D, d	Cowl ventilator louver installation hole	7 (0.28)
E, e	Front side member standard hole	13 (0.51)
F, f	Front side member working hole	15 (0.59)

Symbol	Name	Hole dia.
G, g	Front crossmember gusset standard hole	7 (0.28)
H, h	Radiator side deflector installation hole	7 (0.28)
I, i	Front crossmember standard hole	12 (0.47)
J, j	Hood hinge installation nut - rear	8 (0.31) nut
K, k	Front apron to cowl side member upper cut-out portion	—
—	—	—

BODY OPENING AREAS (Side View-Rear)

(Three-Dimensional Distance)

HINT: For symbols,capital letters indicate right side of vehicle, small letters indicate left side of vehicle(Seen from rear).

mm (in.)

Vehicle Dimensions Left↔Right

N-n	O-o	P-p	Q-q	S-s	T-t
1,415 (55.71)	1,498 (58.98)	1,242 (48.90)	1,494 (58.82)	1,373 (54.06)	1,491 (58.70)

G-q or g-Q	I-p or i-P	I-r or i-R	N-s or n-S	N-t or n-T	O-t or o-T	P-q or p-Q	S-t or s-T
1,831 (72.09)	1,347 (53.03)	1,572 (61.89)	1,558 (61.34)	1,679 (66.10)	1,650 (64.96)	1,689 (66.50)	1,550 (59.06)

Symbol	Name	Hole dia.	Symbol	Name	Hole dia.
G, g	Rocker panel assembly mark	—	Q, q	Rocker panel assembly mark	—
I, i	Roof side rail assembly mark	—	R, r	Roof side rail assembly mark	—
N, n	Center body pillar assembly mark	—	S, s	Quarter panel assembly mark	—
O, o	Center body pillar assembly mark	—	T, t	Quarter panel assembly mark	—
P, p	Roof side rail assembly mark	—	—	—	—

BODY OPENING AREAS (Rear View)

(Three-Dimensional Distance)

Vehicle Dimensions Left↔ Right

C-c	E-e	C-F or c-f
1,339 (52.72)	1,541 (60.67)	618 (24.33)

C-F or c-f
1,160 (45.67)

HINT: For symbols ,capital letters indicate r ight side of v ehicle, small letters indicate left side of v ehicle(Seen from rear).

mm (in.)

Symbol	Name	Hole dia.
A, a	Roof panel / Quarter panel adjoining portion	—
B, b	Upper back panel / Quarter panel adjoining portion	—
C, c	Quarter panel / Upper back panel adjoining portion	—
D, d	Luggage compartment opening trough / Quarter panel adjoining portion	—
E, e	Quarter panel standard hole	10 (0.39)
F, f	Rear floor finish plate installation hole	7 (0.28)
G, g	Rear spring support hole inner - rear	9.5 (0.374)
H, h	Center body pillar assembly mark	—

BODY OPENING AREAS (Side View-Front)

(Three-Dimensional Distance)

HINT: For symbols,capital letters indicate right side of vehicle, small letters indicate left side of vehicle(Seen from rear).

mm (in.)

Vehicle Dimensions Left↔Right

E-e	F-f	G-g	H-h	I-i	J-j	K-k
1,326 (52.20)	1,491 (58.70)	1,491 (58.70)	1,491 (58.70)	1,242 (48.90)	1,402 (55.20)	1,498 (58.98)

E-f or e-F	E-h or e-H	E-j or e-J	F-j or f-J	F-k or f-K	H-i or h-I	J-k or j-K
1,623 (63.90)	1,654 (65.12)	1,483 (58.39)	1,880 (74.02)	1,742 (68.58)	1,691 (66.57)	1,574 (61.97)

Symbol	Name	Hole dia.	Symbol	Name	Hole dia.
A, a	Roof panel / Front body pillar adjoining portion	—	H, h	Rocker panel assembly mark	—
B, b	Cowl panel / Front body pillar adjoining portion	—	I, i	Roof side rail assembly mark	—
C, c	Front door hinge installation nut - rear	8 (0.31) nut	J, j	Center body pillar assembly mark	—
D, d	Front door hinge installation nut - upper	8 (0.31) nut	K, k	Center body pillar assembly mark	—
E, e	Front body pillar assembly mark	—	L, l	Rear door hinge installation hole - front	15 (0.59)
F, f	Front body pillar assembly mark	—	M, m	Rear door hinge installation hole - front	15 (0.59)
G, g	Rocker panel assembly mark	—	—	—	—

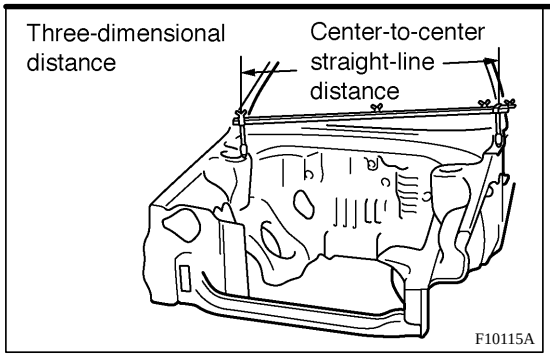

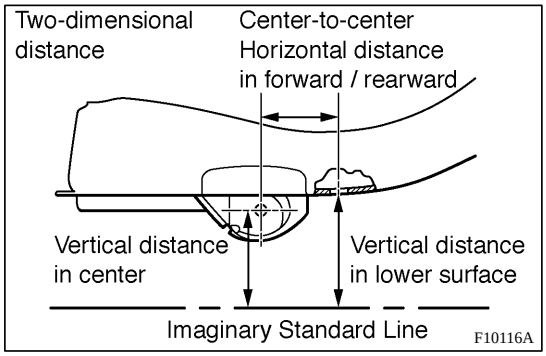

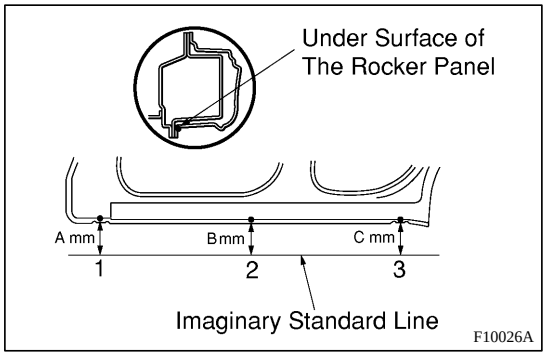

GENERAL INFORMATION

1. BASIC DIMENSIONS

(a) There are two typed of dimensions in the diagram.

(1) (Three-dimensional distance)

- Straight-line distance between the centers of two measuring points.

(2) (Two-dimensional distance)

- Horizontal distance in forward/rearward between the centers of two measuring points.
- The height from an imaginary standard line.

(b) Incases in which only one dimension is given, left and right are symmetrical.

(c) The dimensions in the following drawing indicate actual distance. Therefore, please use the dimensions as a reference.

(d) The line that connects the places listed below is the imaginary standard line when measuring the height. (The dimensions are printed in the text.)

SYMBOL	Name
1	The place that was lowered A mm from the under surface of the rocker panel centered on the front jack up point.
2	The place that was lowered B mm from the under surface of the rocker panel centered between 1 and 3.
3	The place that was lowered C mm from the under surface of the rocker panel centered on the rear jack up point.

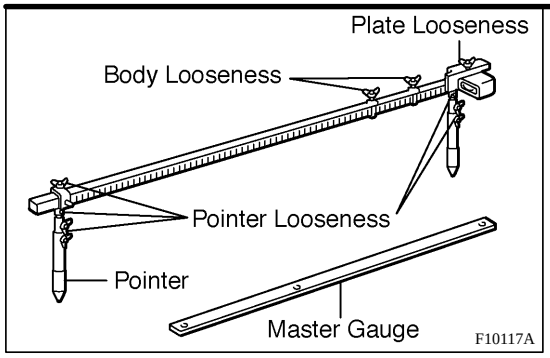

2. MEASURING

(a) Basically, all measurements are to be done with a tracking gauge. For portions where it is not possible to use a tracking gauge, a tape measure should be used.

(b) Use only a tracking gauge that has no looseness in the body, measuring plate, or pointers.

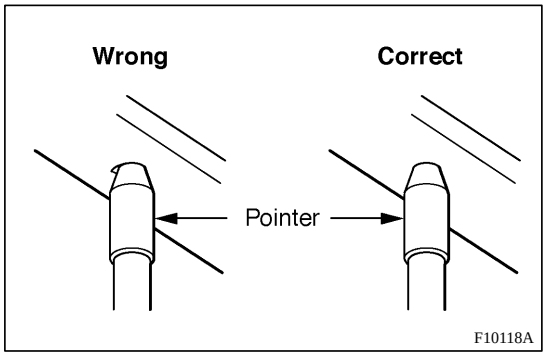

HINT:

1. The height of the left and right points must be equal.
2. Always calibrate the tracking gauge before measuring or after adjusting the pointer height.
3. Take care not to drop the tracking gauge or otherwise shock it.
4. Confirm that the pointers are securely in the holes.

(c) When using a tape measure, avoid twists and bends in the tape.

(d) When tracking a diagonal measurement from the front spring support inner hole to the suspension member upper rear installation hole, measure along the front spring support panel surface.

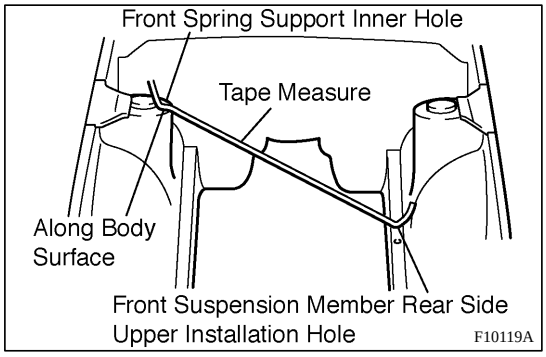

(Three-Dimensional Distance)

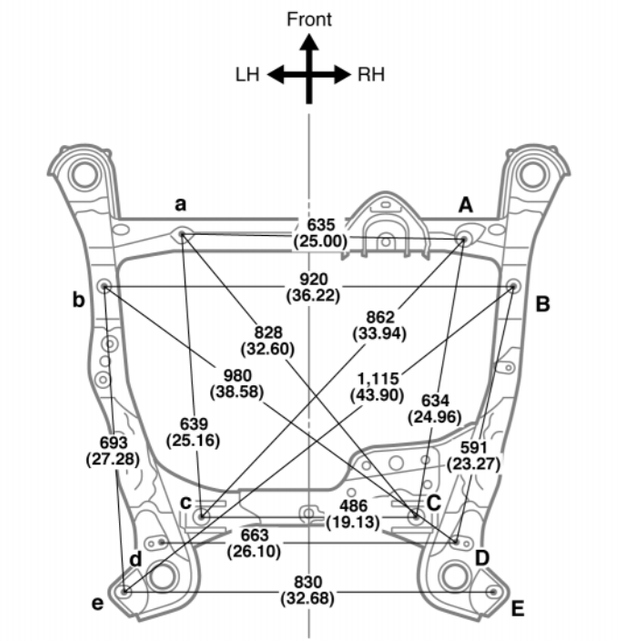

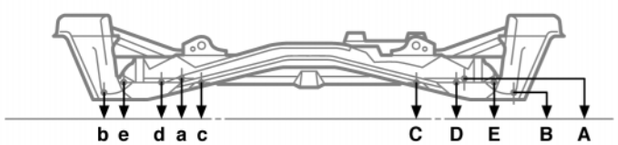

(Two-Dimensional Distance)

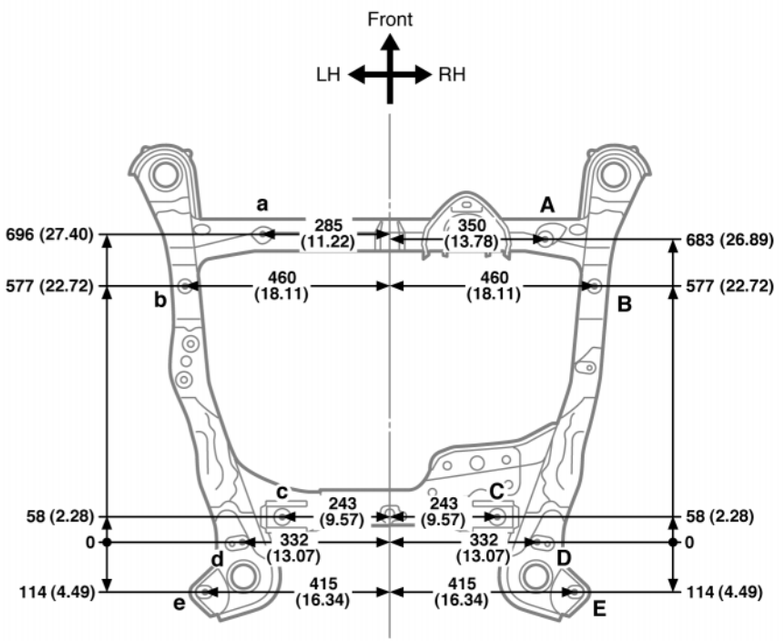

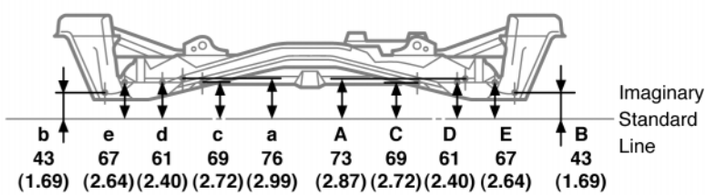

mm (in.)

Symbol	Name	Hole dia.	Symbol	Name	Hole dia.
A, a	Front frame standard hole	13 (0.51)	D, d	Front frame standard hole	13 (0.51)
B, b	Front frame standard hole	13 (0.51)	E, e	Lower control link installation hole - lower	15 (0.59)
C, c	Front frame standard hole	13 (0.51)	—	—	—

UNDER BODY

(Three-Dimensional Distance)

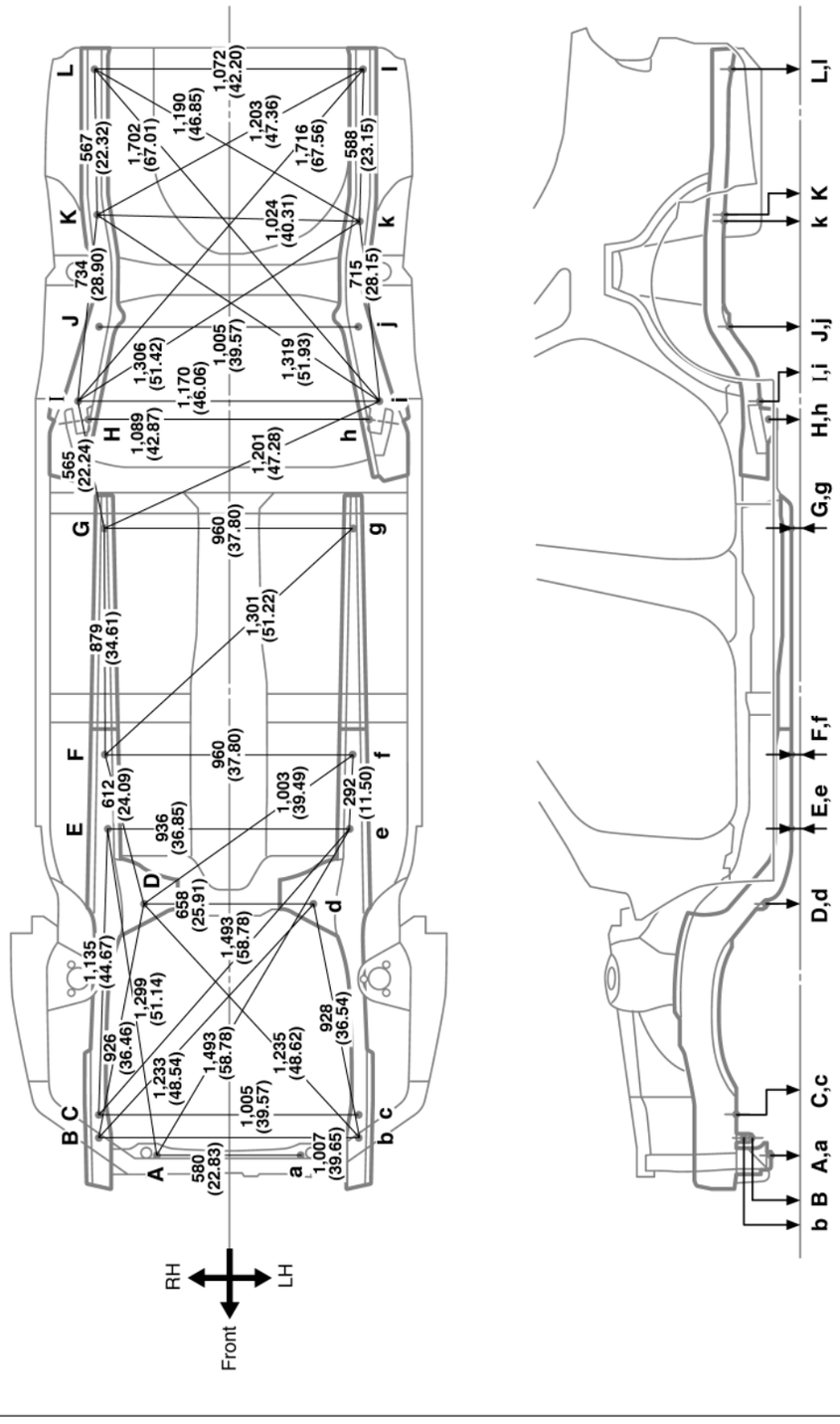

Symbol	Name	Hole dia.
A, a	Front crossmember standard hole	10 (0.39)
B, b	Front frame installation nut	14 (0.55) nut
C, c	Front side member standard hole	18 (0.71)
D, d	Front frame installation nut	14 (0.55) nut
E, e	Front side member standard hole	18 (0.71)
F, f	Front side member working hole	15 (0.59)

Symbol	Name	Hole dia.
G, g	Front floor under reinforcement standard hole	15 (0.59)
H, h	Strut bar installation hole - inner	12 (0.47)
I, i	Rear floor side member standard hole	18 (0.71)
J, j	Rear suspension member installation nut	12 (0.47) nut
K, k	Rear floor side member standard hole	18 (0.71)
L, l	Rear floor side member standard hole	18 (0.71)

UNDER BODY (Cont'd)

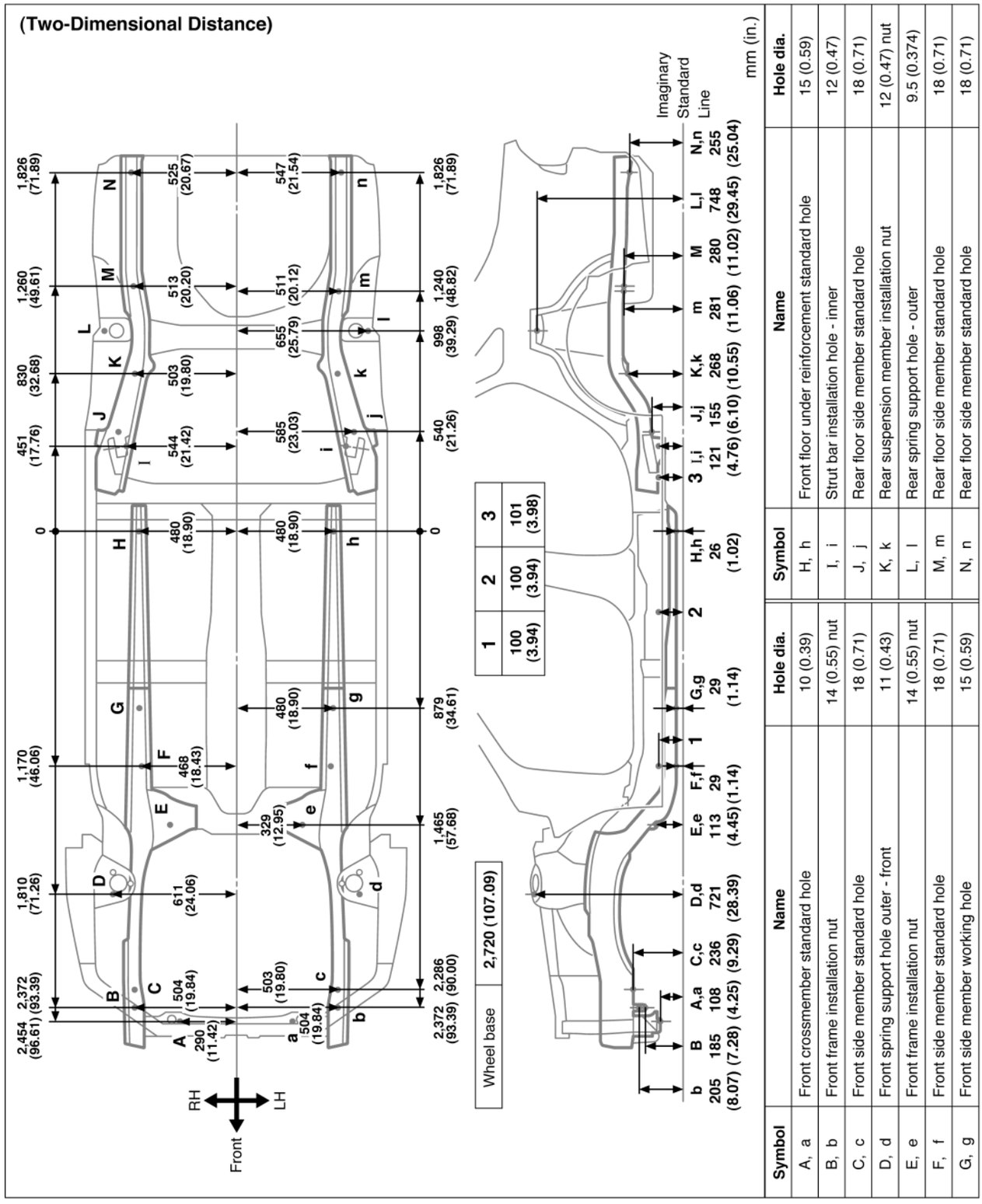

Symbol	Name	Hole dia.
A, a	Front crossmember standard hole	10 (0.39)
B, b	Front frame installation nut	14 (0.55) nut
C, c	Front side member standard hole	18 (0.71)
D, d	Front spring support hole outer - front	11 (0.43)
E, e	Front frame installation nut	14 (0.55) nut
F, f	Front side member standard hole	18 (0.71)
G, g	Front side member working hole	15 (0.59)

Symbol	Name	Hole dia.
H, h	Front floor under reinforcement standard hole	15 (0.59)
I, i	Strut bar installation hole - inner	12 (0.47)
J, j	Rear floor side member standard hole	18 (0.71)
K, k	Rear suspension member installation nut	12 (0.47) nut
L, l	Rear spring support hole - outer	9.5 (0.374)
M, m	Rear floor side member standard hole	18 (0.71)
N, n	Rear floor side member standard hole	18 (0.71)

BODY LOWER BACK PANEL (ASSY)

REPLACEMENT

1. REMOVE BODY LOWER BACK PANEL

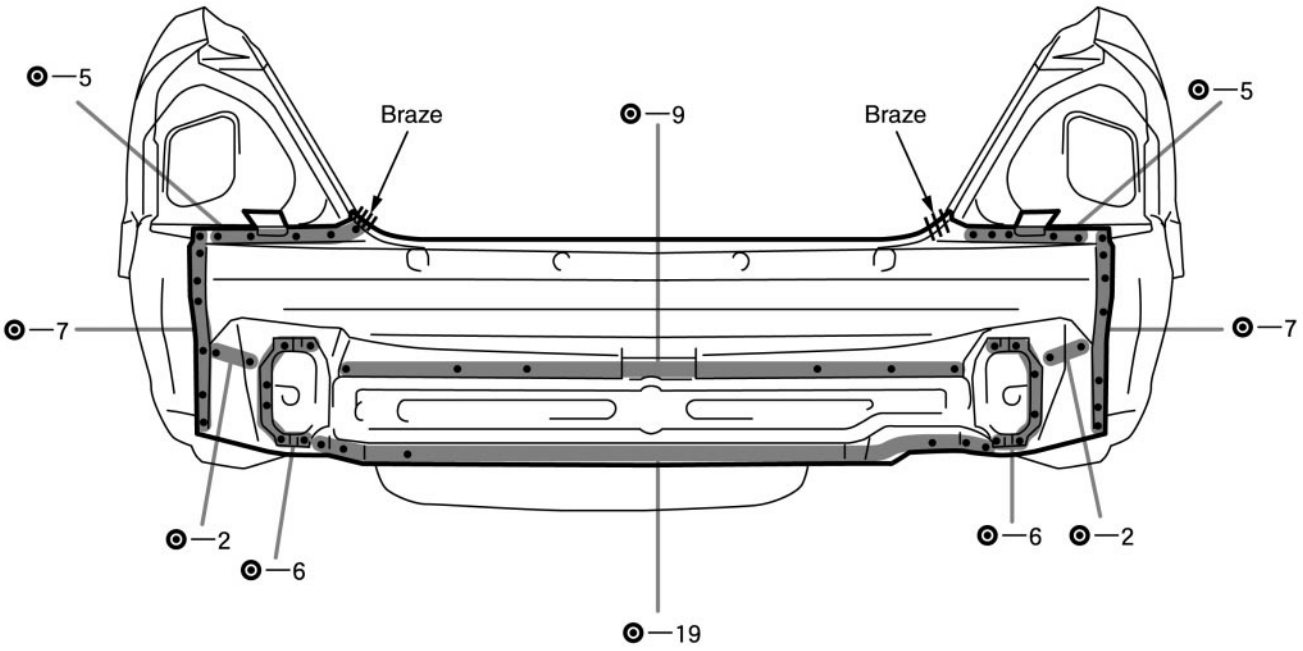

F10187

2. INSTALL BODY LOWER BACK PANEL

HINT:
Inspect the fitting of the luggage compartment door and rear combination light, etc., before welding, since this attacts the appearance of the finish.

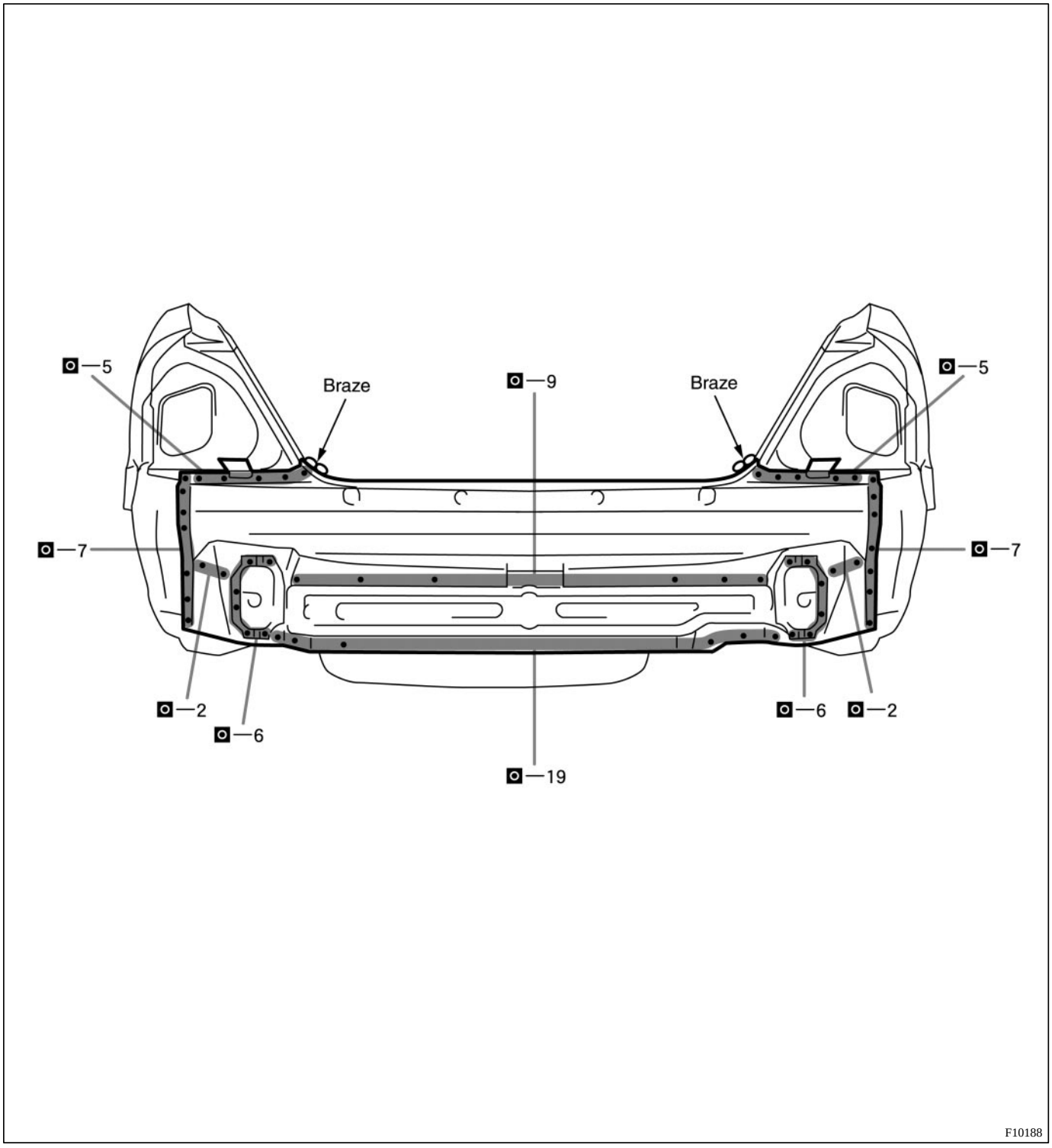

3. APPLYING SEALER TO THE INSIDE OF THE VEHICLE (See page PC-1)

4. APPLYING SEALER TO THE REAR LUGGAGE COMPARTMENT (See page PC-1)

5. APPLYING UNDER COATING (See page PC-6)

6. APPLYING ANTI-RUST AGENT

(a) After applying the top coat layer, apply the anti-rust agent to the inside of the necked section structural weld spots.

CENTER BODY PILLAR (CUT)

REPLACEMENT

1. REMOVE CENTER BODY PILLAR

(a) Cut and join the parts at the locations as shown below.

(b) Shift the each cut and join location of the pillar section. (center body outer pillar, center body pillar upper reinforcement and center body inner pillar.)

(c) Shift the each cut and join location of the rocker section. (center body outer pillar and center body pillar lower reinforcement.)

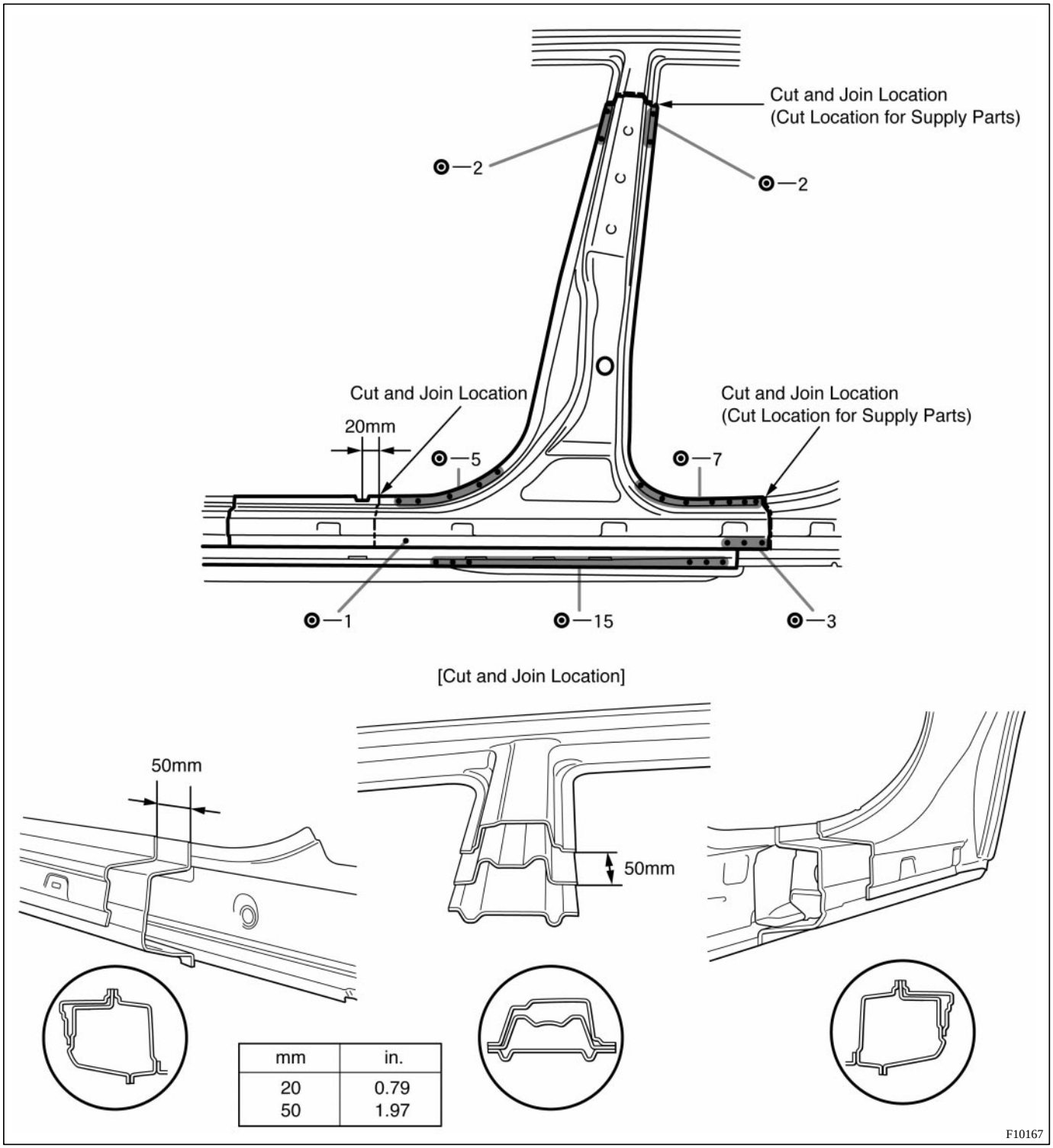

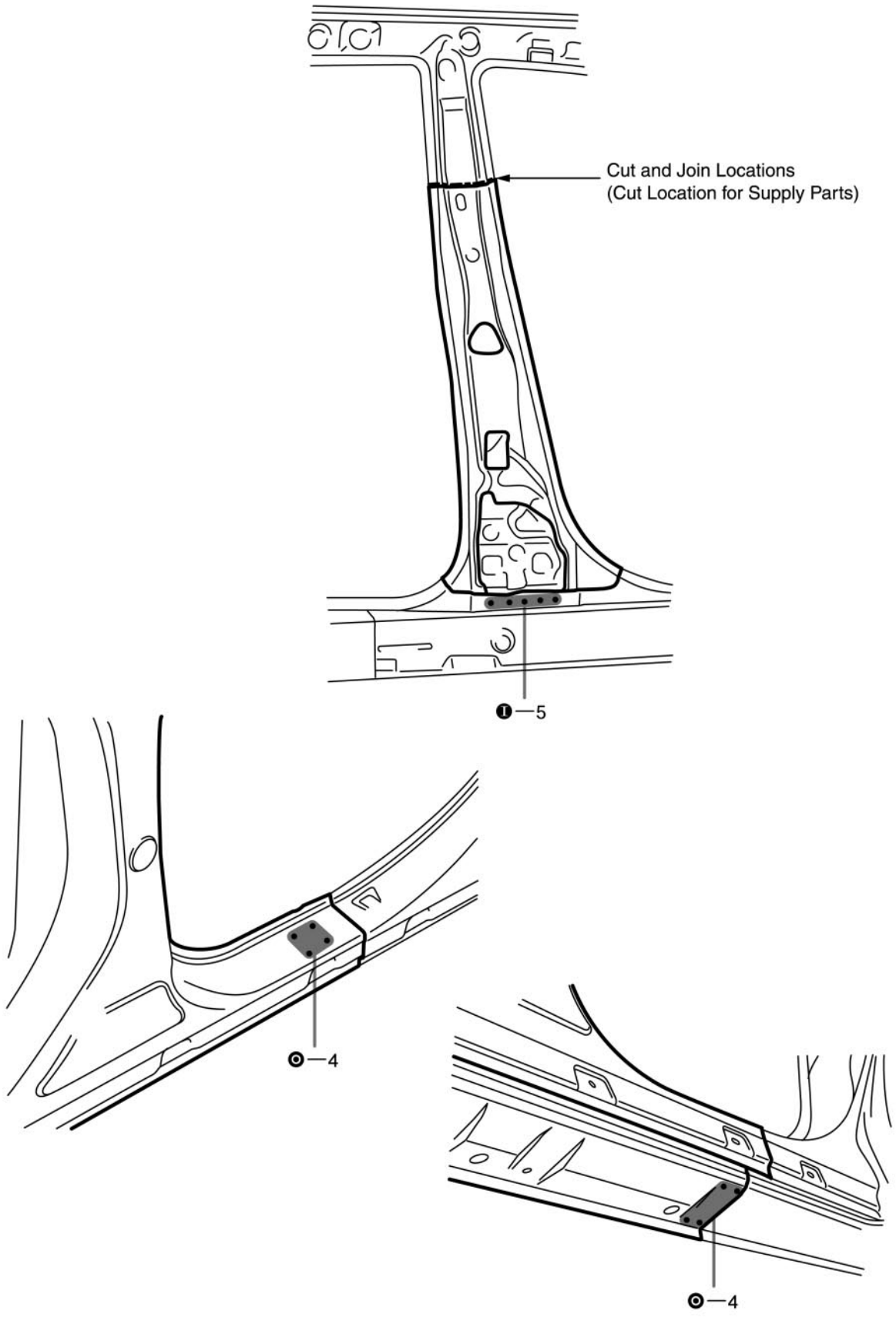
Cut and Join Locations
(Cut Location for Supply Parts)
❶—5
⊙—4
⊙—4
F10168

2. INSTALL CENTER BODY PILLAR

HINT:
Inspect the fitting of the front door and rear door, etc., before welding since this affects the appearance of the finish.

(a) Before temporarily installing the new parts, weld the center body inner pillar, center body pillar lower reinforcement and center body pillar upper reinforcement.

(b) After welding the center body inner pillar, center body pillar lower reinforcement and center body pillar upper reinforcement to the vehicle, install the center body outer pillar.

(c) Temporarily install the new parts and measure each part in accordance with the body dimension diagram.

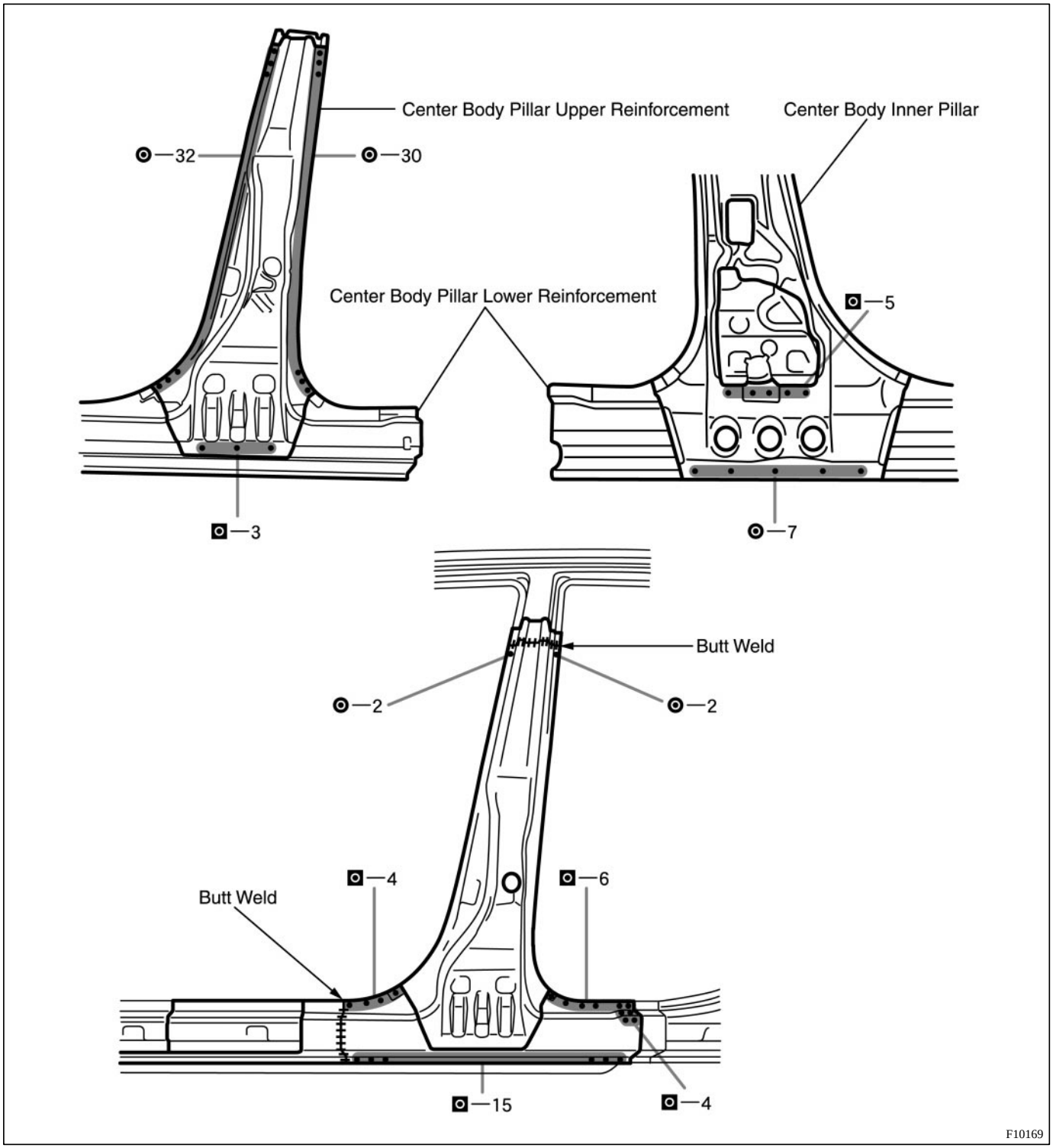

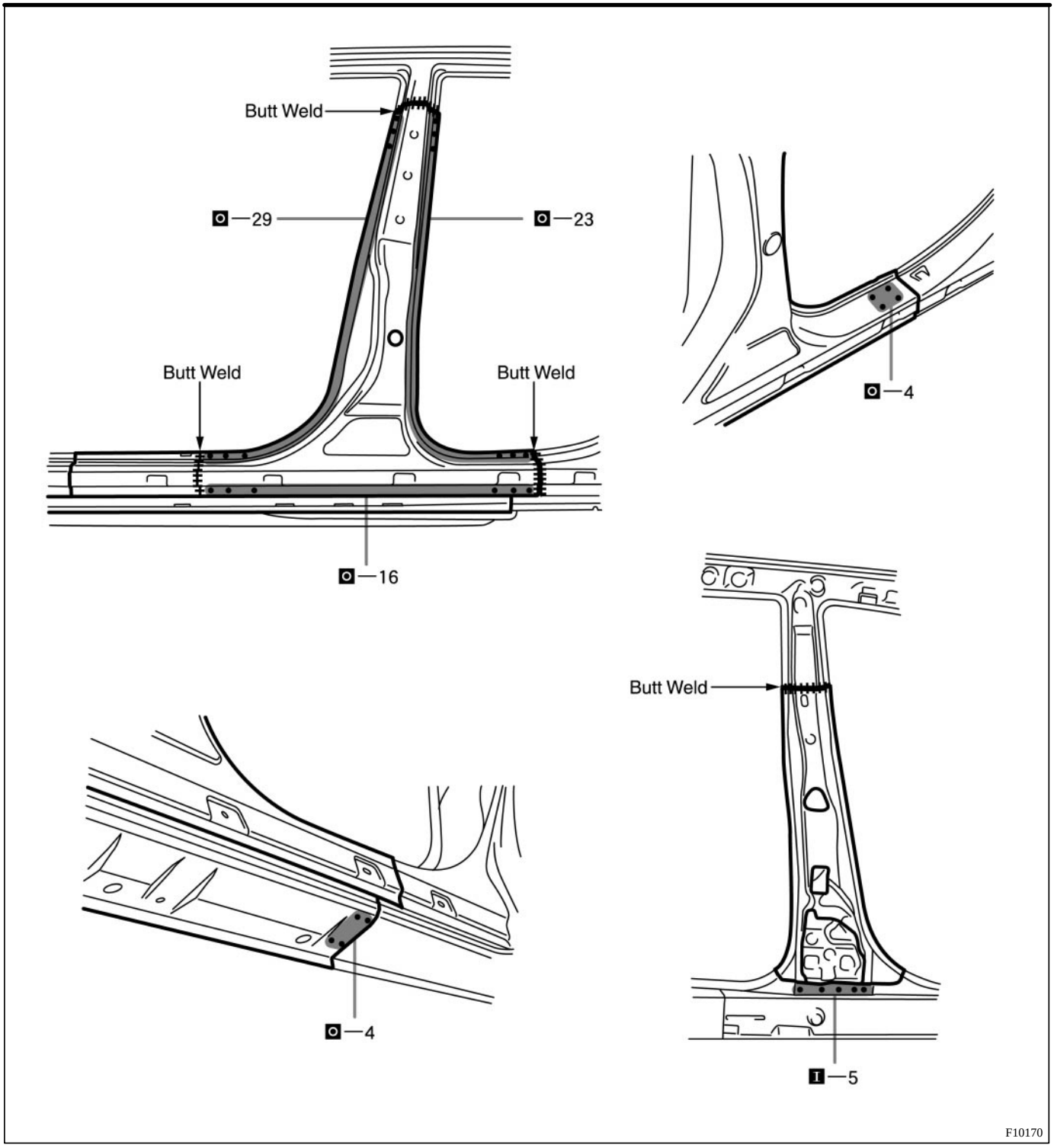

3. MEASURING THE OPENING PORTION DIMENSIONS (See page BP-84)

4. APPLYING SEALER TO THE INSIDE OF THE VEHICLE (See page PC-1)

5. APPLYING UNDER COATING (See page PC-6)

6. CHARGING THE POLYURETHANE FOAM (See page PC-8)

7. APPLYING ANTI-RUST AGENT

(a) After applying the top coat layer, apply the anti-rust agent to the inside of the necked section structural weld spots.

COWL TOP SIDE PANEL (ASSY)

REPLACEMENT

1. REMOVE COWL TOP SIDE PANEL

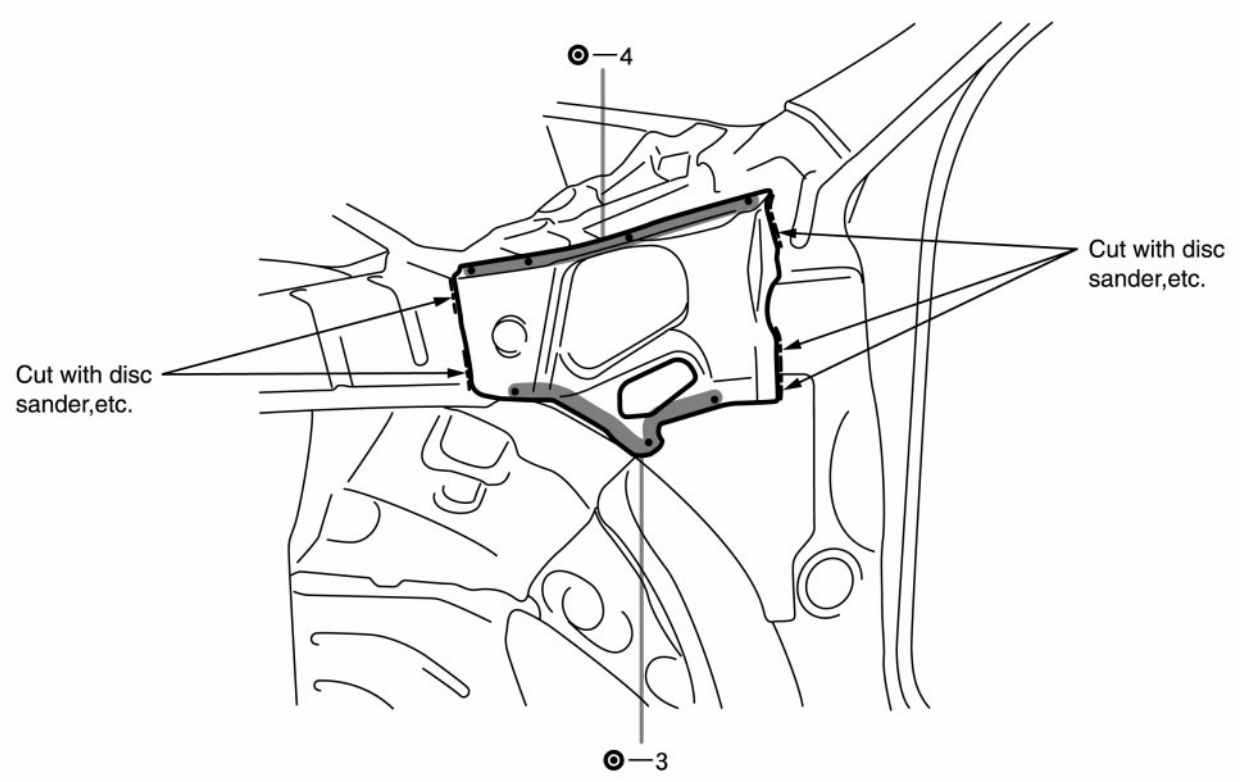

F10154

2. INSTALL COWL TOP SIDE PANEL

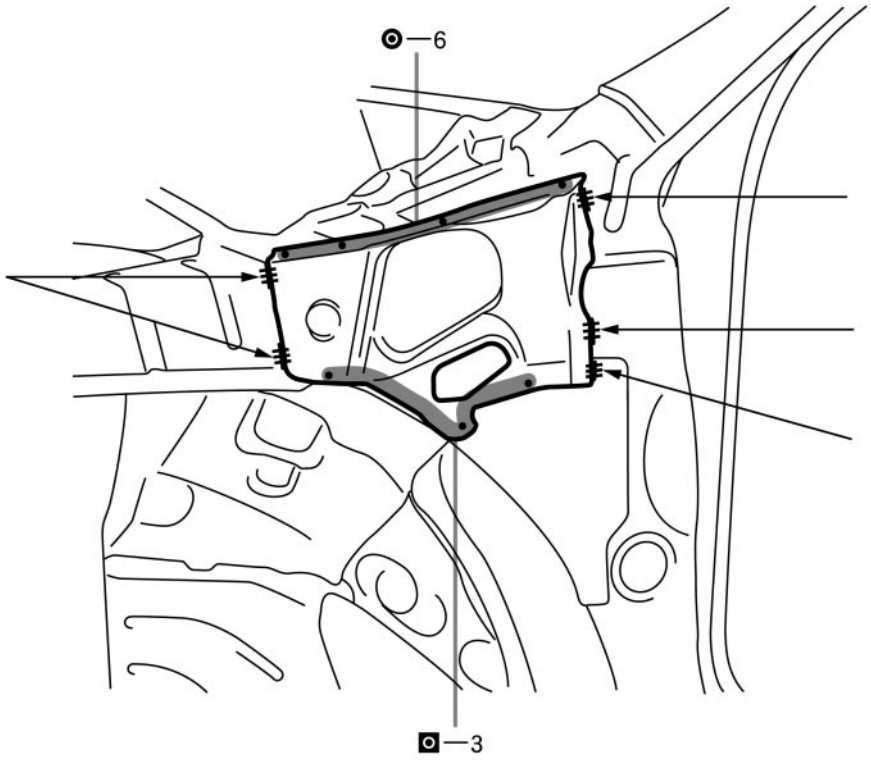

mm	in.
14	0.55
16	0.63
20□	0.79
30	1.18

F10155

3. APPLYING SEALER TO THE ENGINE COMPARTMENT (See page PC-1)

4. APPLYING ANTI-RUST AGENT

(a) After applying the top coat layer, apply the anti-rust agent to the inside of the necked section structural weld spots.

FRONT CROSSMEMBER (ASSY)

REPLACEMENT

1. REMOVE FRONT CROSSMEMBER

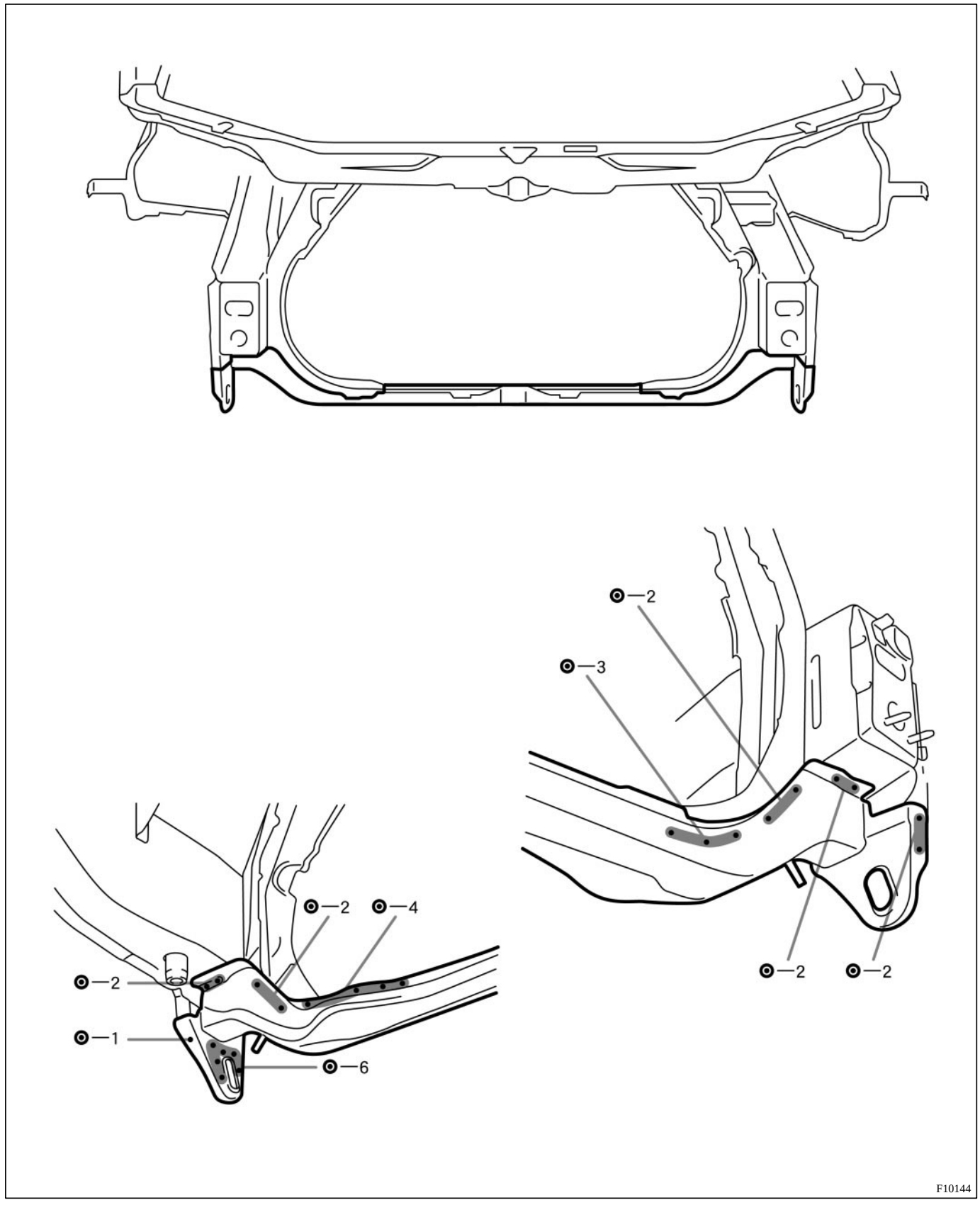

2. INSTALL FRONT CROSSMEMBER

(a) Temporarily install the new parts and measure each part in accordance with the body dimension diagram.

HINT:
First install the hood lock support.

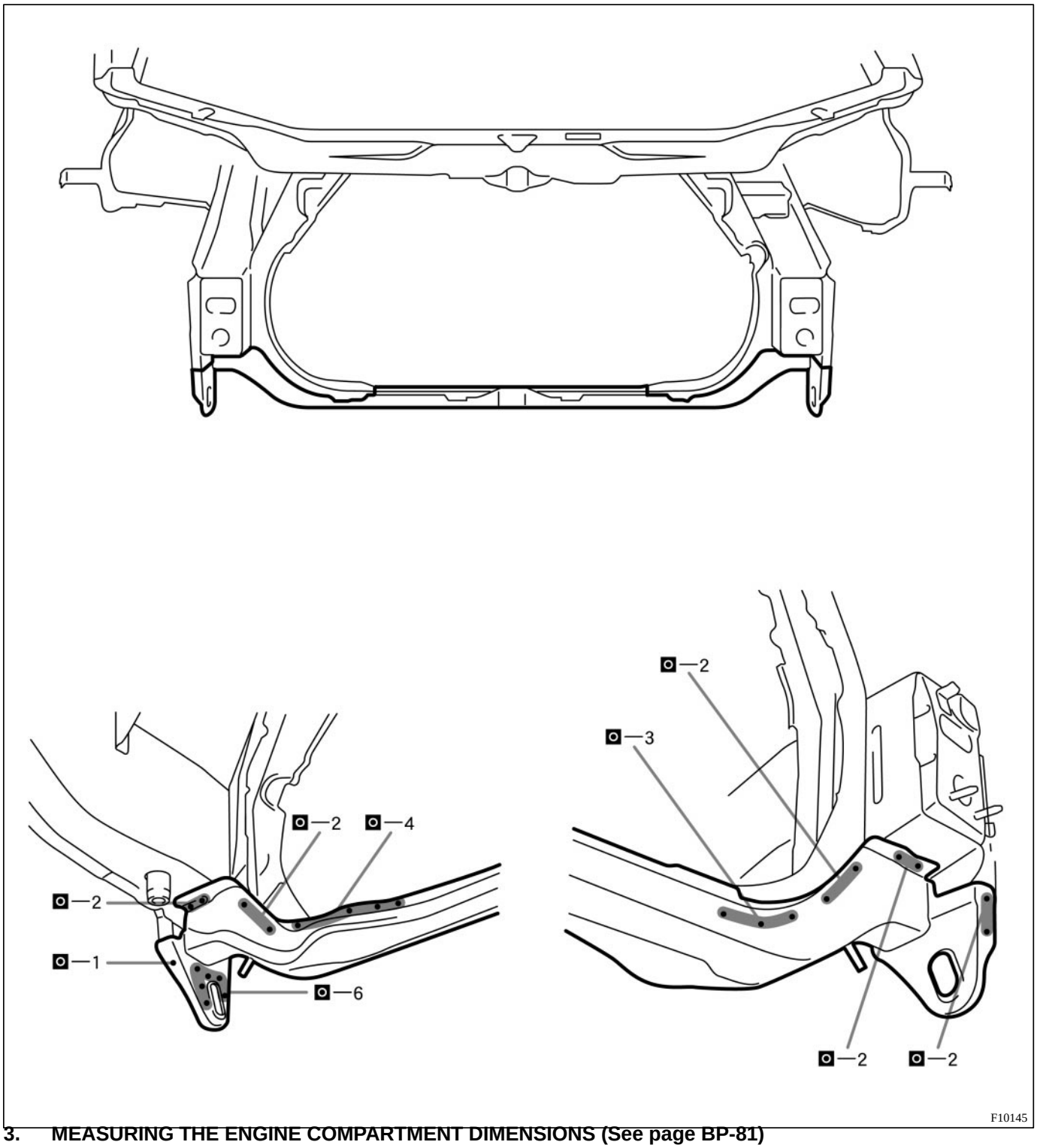

3. MEASURING THE ENGINE COMPARTMENT DIMENSIONS (See page BP-81)

4. MEASURING THE UNDERBODY DIMENSIONS (See page BP-85)

5. APPLYING ANTI-RUST AGENT

(a) After applying the top coat layer, apply the anti-rust agent to the inside of the necked section structural weld spots.

FRONT FENDER APRON (ASSY)

REPLACEMENT

1. REMOVE RADIATOR UPPER SUPPORT (See page BP-1)
2. REMOVE COWL TOP SIDE PANEL (See page BP-18)
3. REMOVE FRONT FENDER APRON

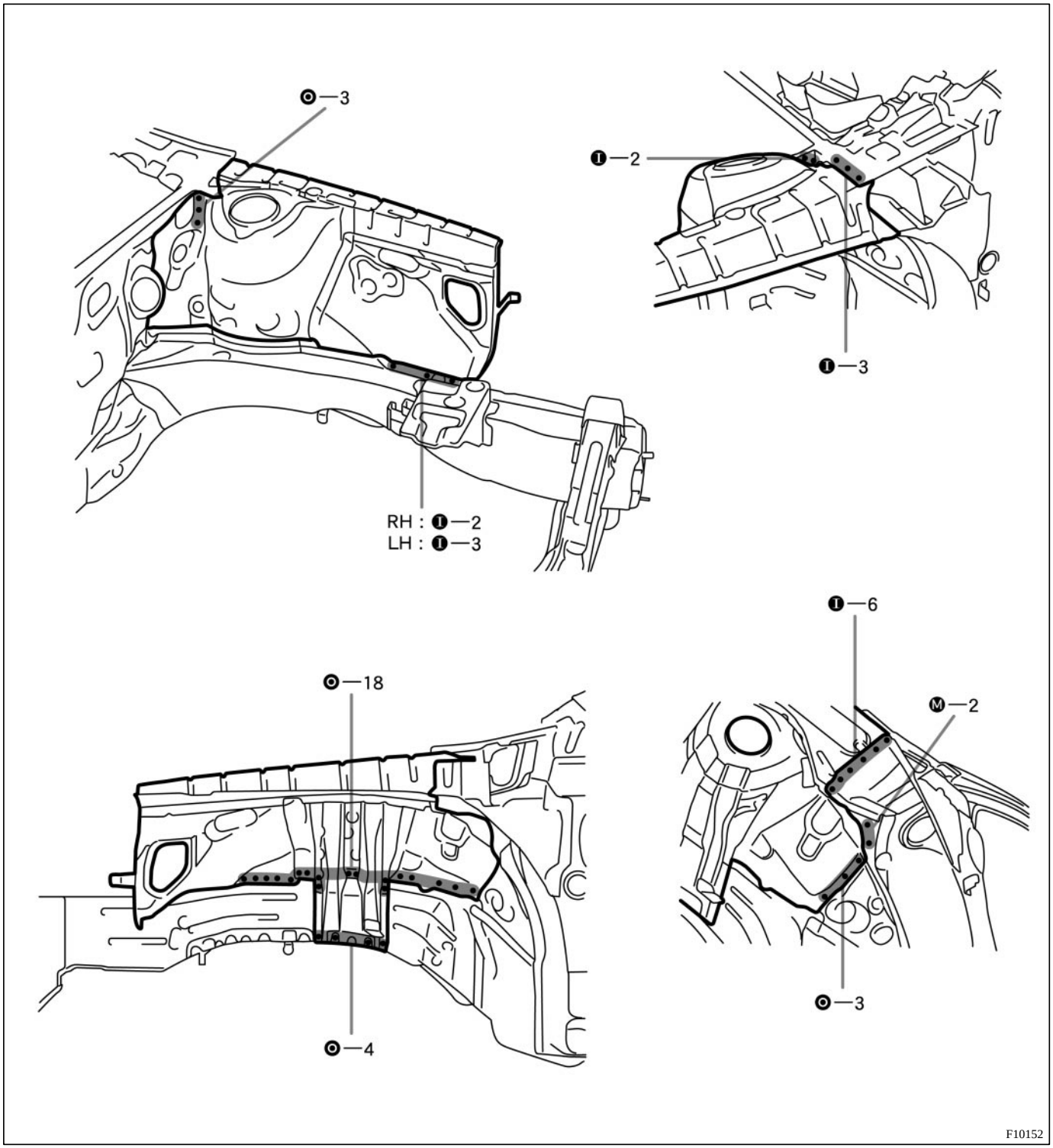

4. INSTALL FRONT FENDER APRON

HINT:
Inspect the fitting of the front fender and hood, etc. before welding, since this affects the appearance of the finish.

(a) Temporarily install the new parts and measure each part in accordance with the body dimension diagram.

HINT:
Make sure each measurement is correct, as this parts affects the front wheel alignment.

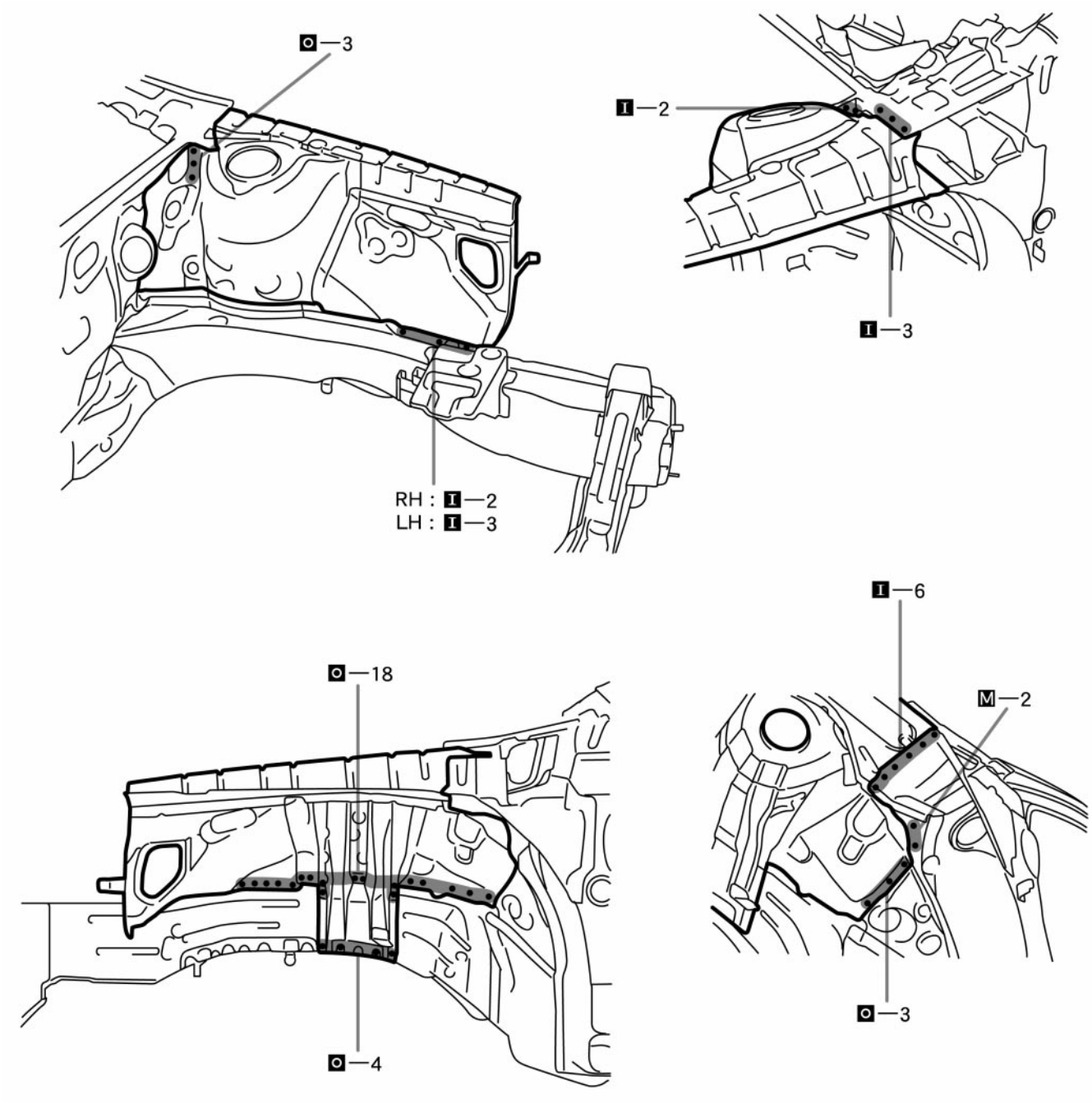

5. MEASURING THE ENGINE COMPARTMENT DIMENSIONS (See page BP-81)

6. INSTALL COWL TOP SIDE PANEL (See page BP-18)

7. INSTALL RADIATOR UPPER SUPPORT (See page BP-1)

8. APPLYING SEALER TO THE ENGINE COMPARTMENT (See page PC-1)

9. APPLYING UNDER COATING (See page PC-6)

10. APPLYING ANTI-RUST AGENT

(a) After applying the top coat layer, apply the anti-rust agent to the inside of the necked section structural weld spots.

FRONT SIDE MEMBER (ASSY)

REPLACEMENT

1. **REMOVE RADIATOR UPPER SUPPORT (See page BP-1)**
2. **REMOVE FRONT CROSSMEMBER SIDE GUSSET (See page BP-3)**
3. **REMOVE FRONT CROSSMEMBER (See page BP-5)**
4. **REMOVE COWL TOP SIDE PANEL (See page BP-18)**
5. **REMOVE FRONT FENDER APRON (See page BP-15)**
6. **REMOVE FRONT SIDE MEMBER**

(a) Leave the floor side member No.4 reinforcement to the vehicle, remove the front side member.

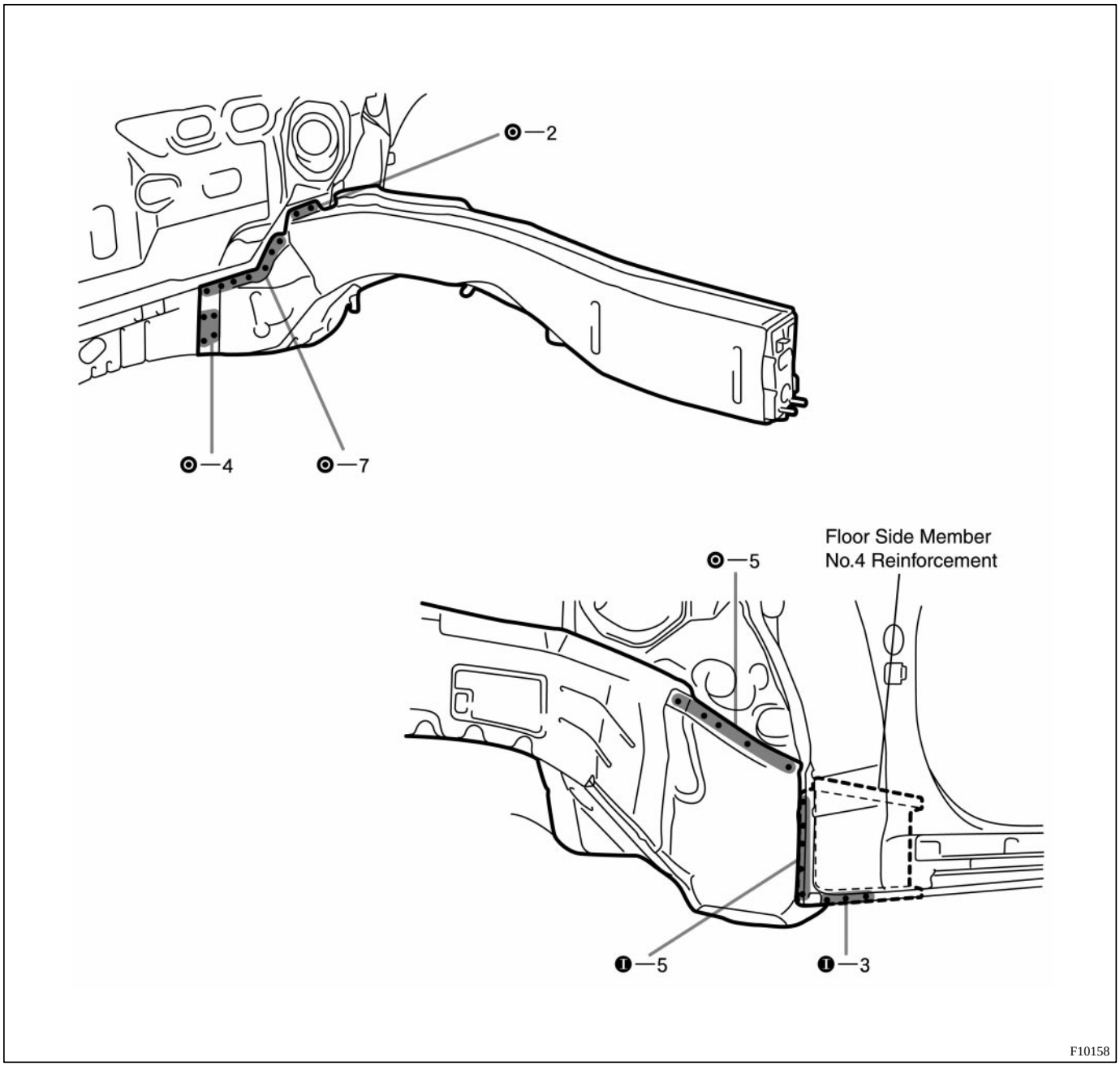

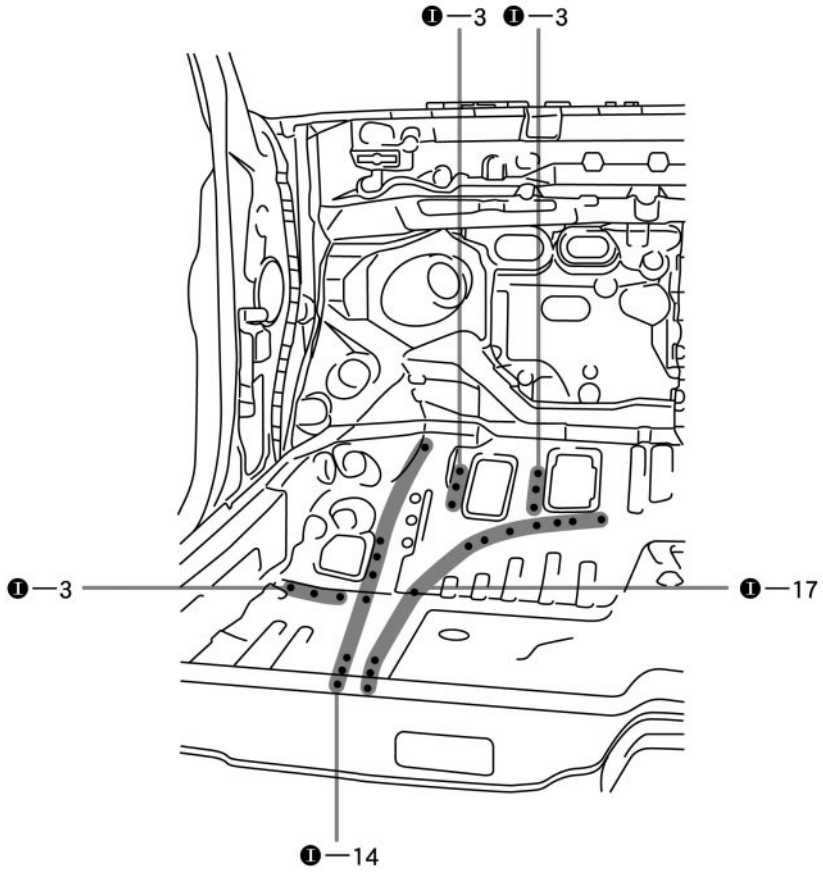

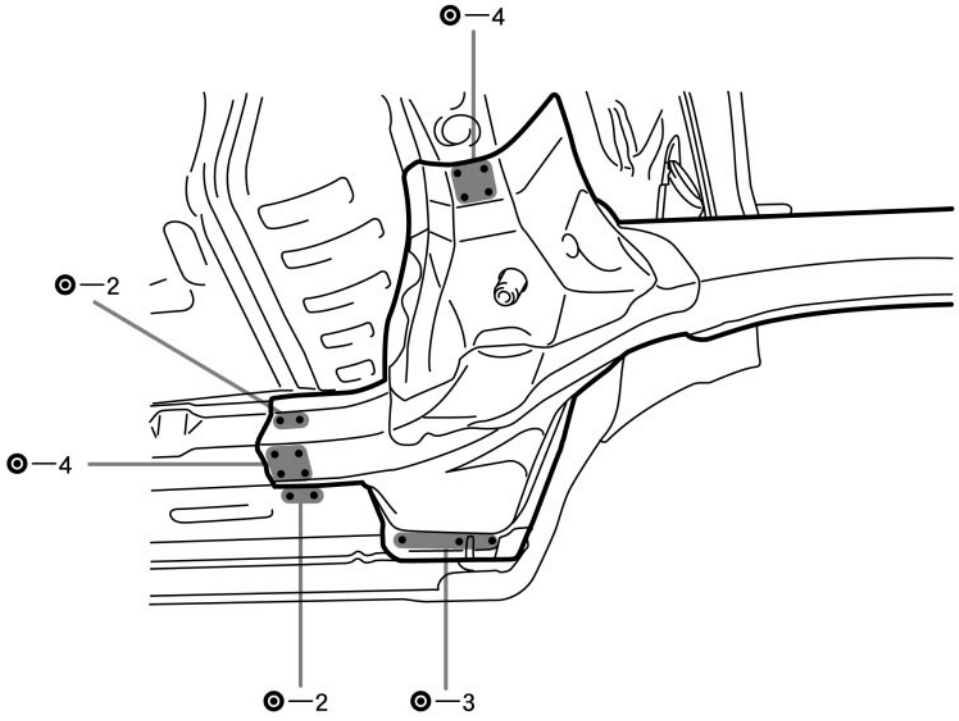

F10159

7. INSTALL FRONT SIDE MEMBER

(a) Remove the floor side member No.4 reinforcement from the new parts of front side member.

(b) Temporarily install the new parts and measure each part in accordance with the body dimension diagram.

HINT:
Make sure each measurement is correct, as this parts affects the front wheel alignment.

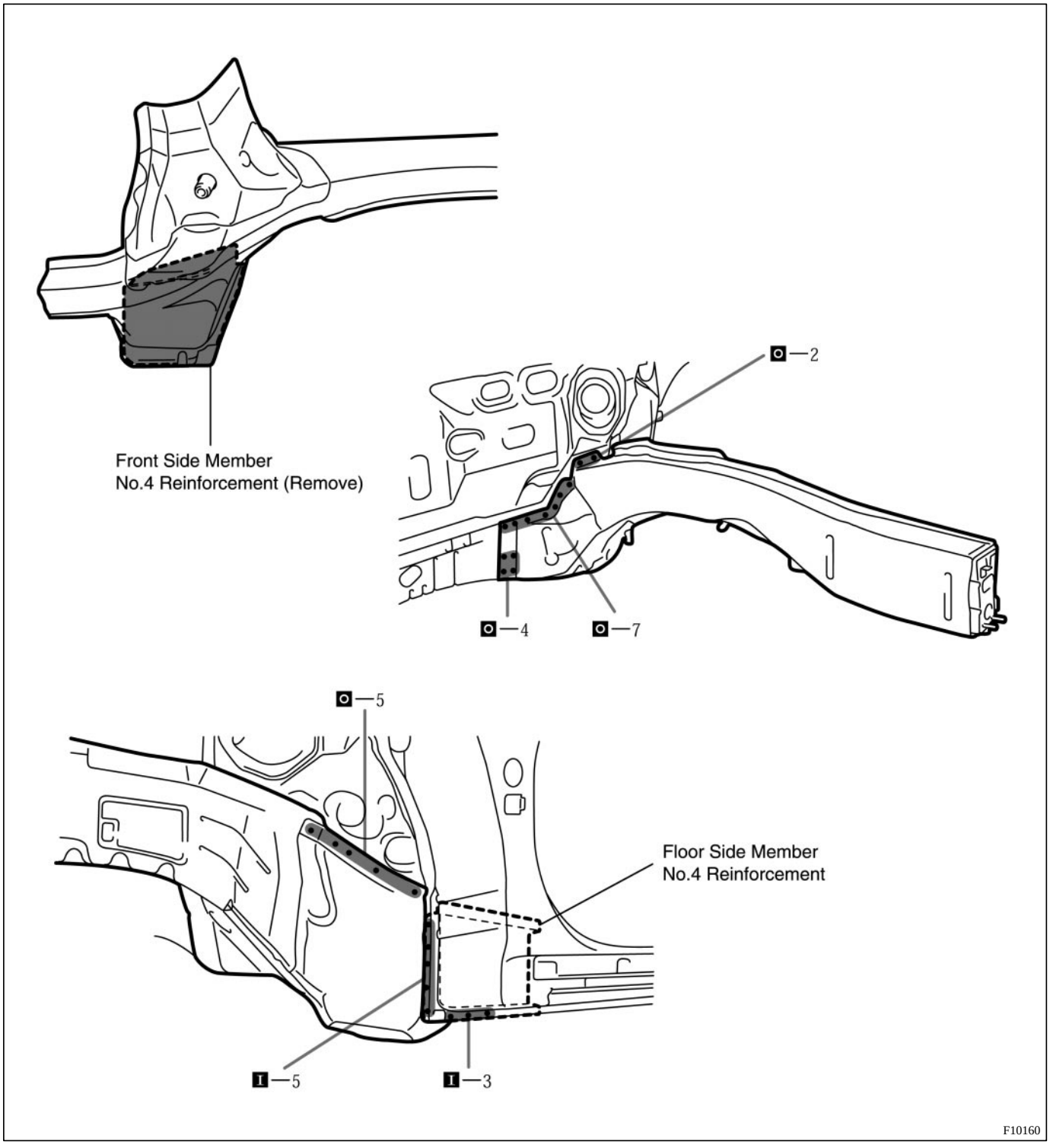

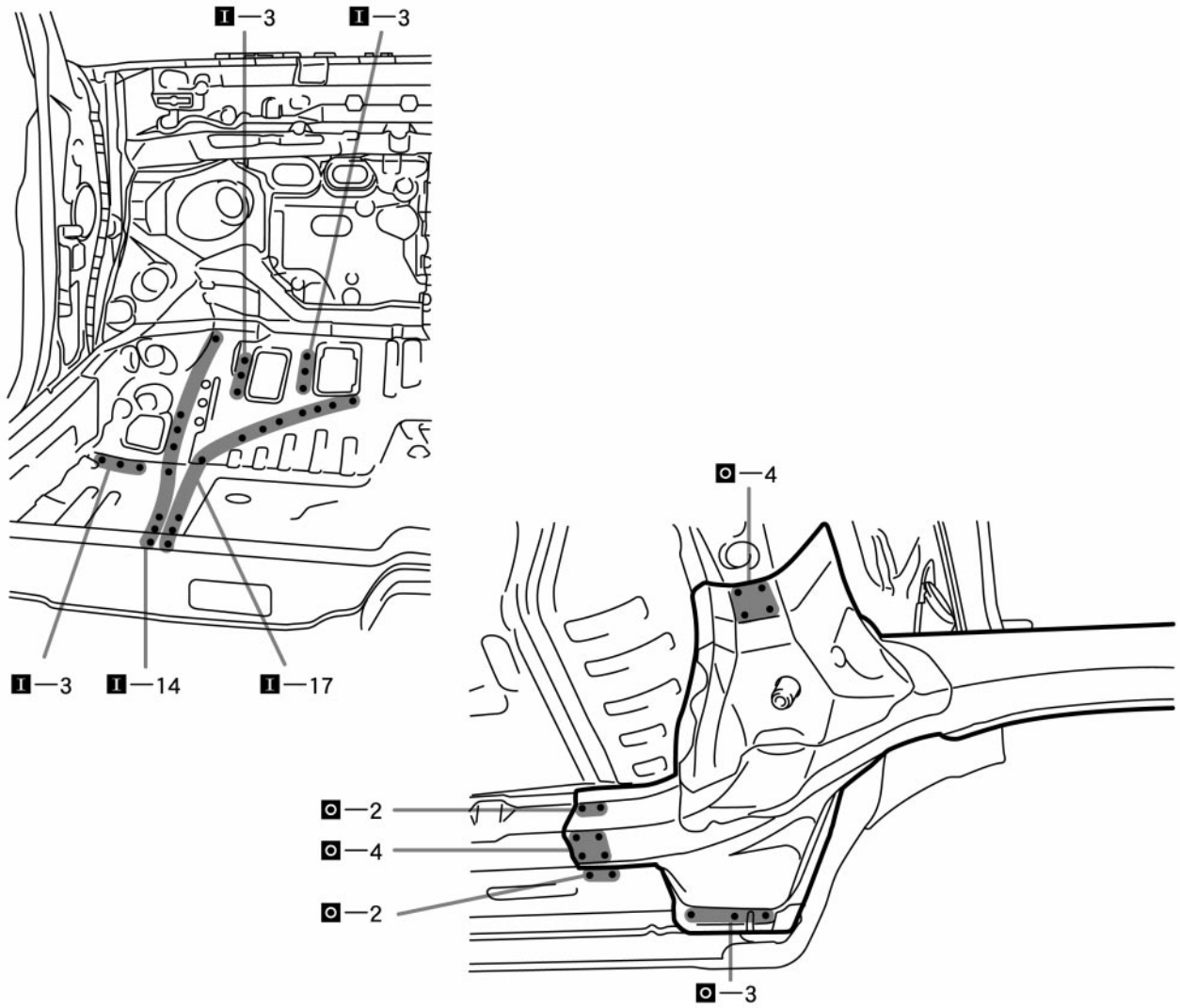

8. **MEASURING THE ENGINE COMPARTMENT DIMENSIONS (See page BP-81)**
9. **MEASURING THE UNDER BODY DIMENSIONS (See page BP-85)**
10. **INSTALL FRONT FENDER APRON (See page BP-15)**
11. **INSTALL COWL TOP SIDE PANEL (See page BP-18)**
12. **INSTALL FRONT CROSSMEMBER (See page BP-5)**
13. **INSTALL FRONT CROSSMEMBER SIDE GUSSET (See page BP-3)**
14. **INSTALL RADIATOR UPPER SUPPORT (See page BP-1)**
15. **APPLYING SEALER TO THE ENGINE COMPARTMENT (See page PC-1)**
16. **APPLYING SEALER TO THE INSIDE OF THE VEHICLE (See page PC-2)**
17. **APPLYING UNDER COATING (See page PC-6)**
18. **APPLYING ANTI-RUST AGENT**

(a) After applying the top coat layer, apply the anti-rust agent to the inside of the necked section structural weld spots.

19. **INSTALL FRONT FLOOR SILENCER SHEET (See page PC-9)**

FRONT APRON TO COWL SIDE UPPER MEMBER (ASSY)

REPLACEMENT

1. **REMOVE COWL TOP SIDE PANEL (See page BP-18)**
2. **REMOVE RADIATOR UPPER SUPPORT (See page BP-1)**
3. **REMOVE FRONT FENDER FRONT APRON (See page BP-9)**
4. **REMOVE FRONT APRON TO COWL SIDE UPPER MEMBER**

(a) After removing the front apron to cowl side lower member, remove the front apron to cowl side upper member.

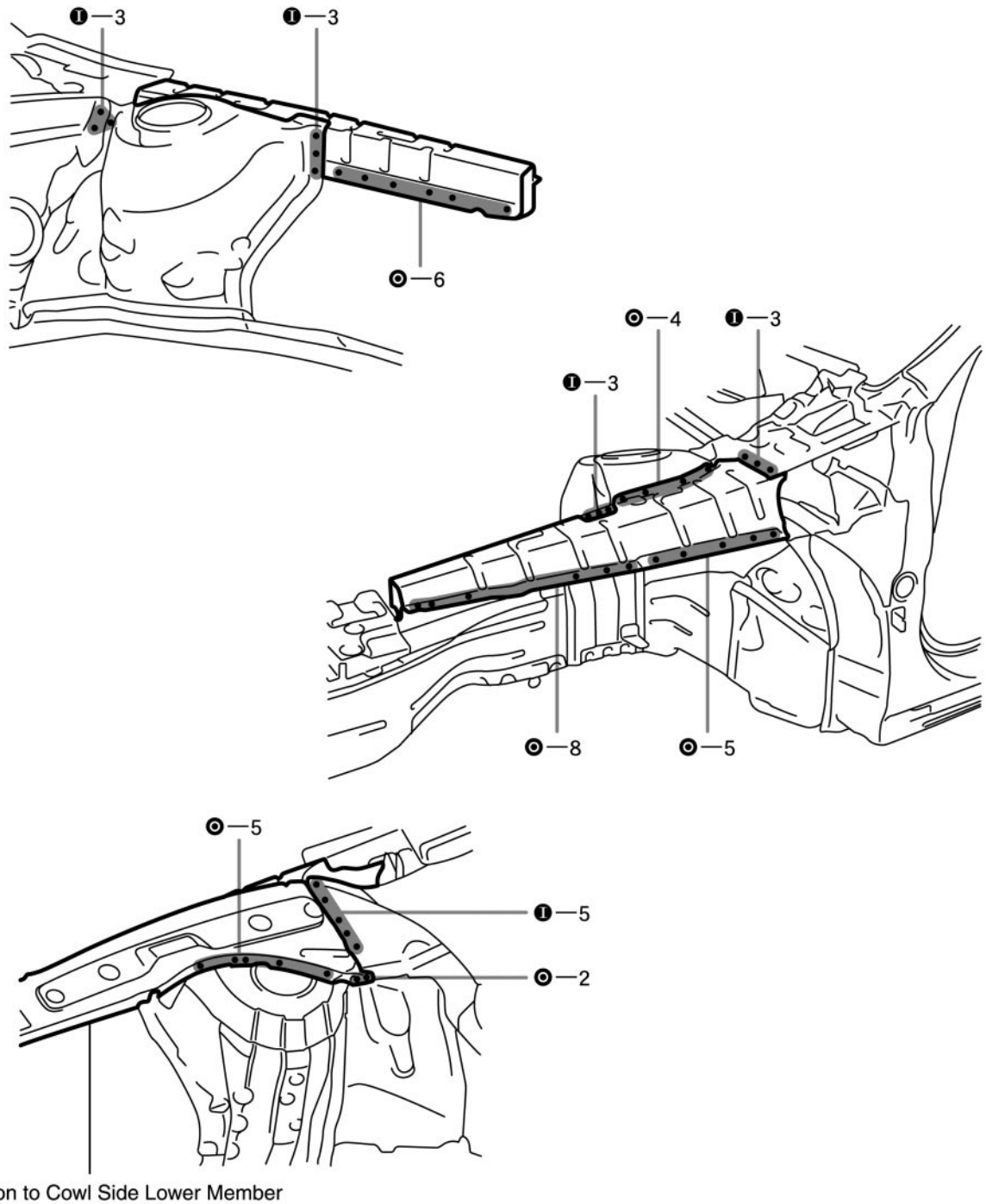

Front Apron to Cowl Side Lower Member

F10150

5. INSTALL FRONT APRON TO COWL SIDE UPPER MEMBER

HINT:
Inspect the fitting of the front fender and hood, etc. before welding, since this affects the appearance of the finish.

(a) Temporarily install the new parts and measure each part in accordance with the body dimension diagram.

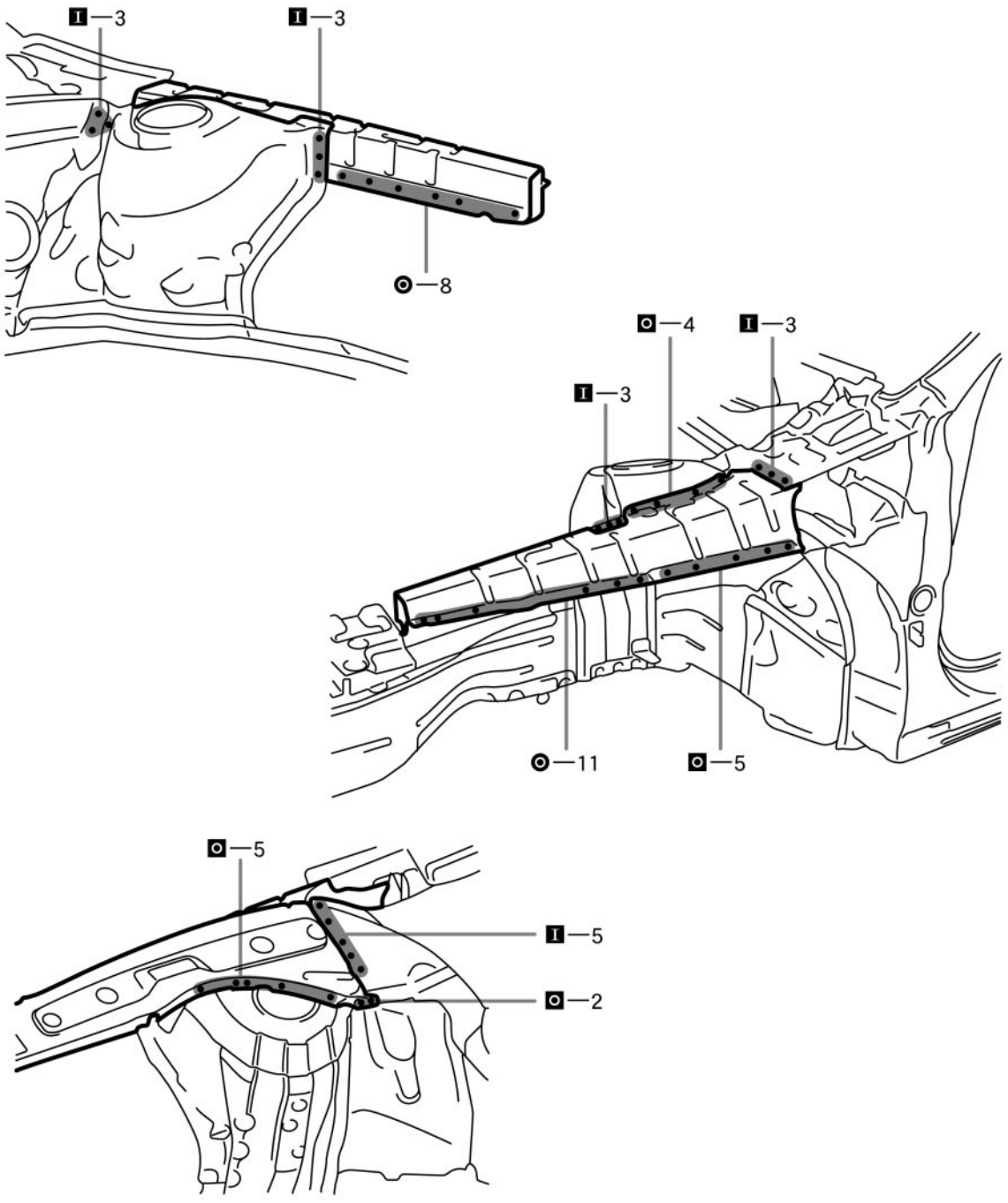

6. INSTALL FRONT FENDER FRONT APRON (See page BP-9)

7. INSTALL RADIATOR UPPER SUPPORT (See page BP-1)

8. INSTALL COWL TOP SIDE PANEL (See page BP-18)

9. APPLYING SEALER TO THE ENGINE COMPARTMENT (See page PC-1)

10. APPLYING ANTI-RUST AGENT

(a) After applying the top coat layer, apply the anti-rust agent to the inside of the necked section structural weld spots.

FRONT BODY PILLAR (CUT)

REPLACEMENT

1. REMOVE COWL TOP SIDE PANEL (See page BP-18)

2. REMOVE FRONT BODY PILLAR

(a) Cut and join the parts at the locations as shown below.

HINT:

- Shift the each cut and join locations of the outer pillar, pillar reinforcement and inner pillar.
- Shift the each cut and join locations of the rocker outer panel and center body pillar lower reinforcement.
- This part of the outer panel is reused, since the rocker panel section is cut off at the rear the outer panel supply part cutting position.

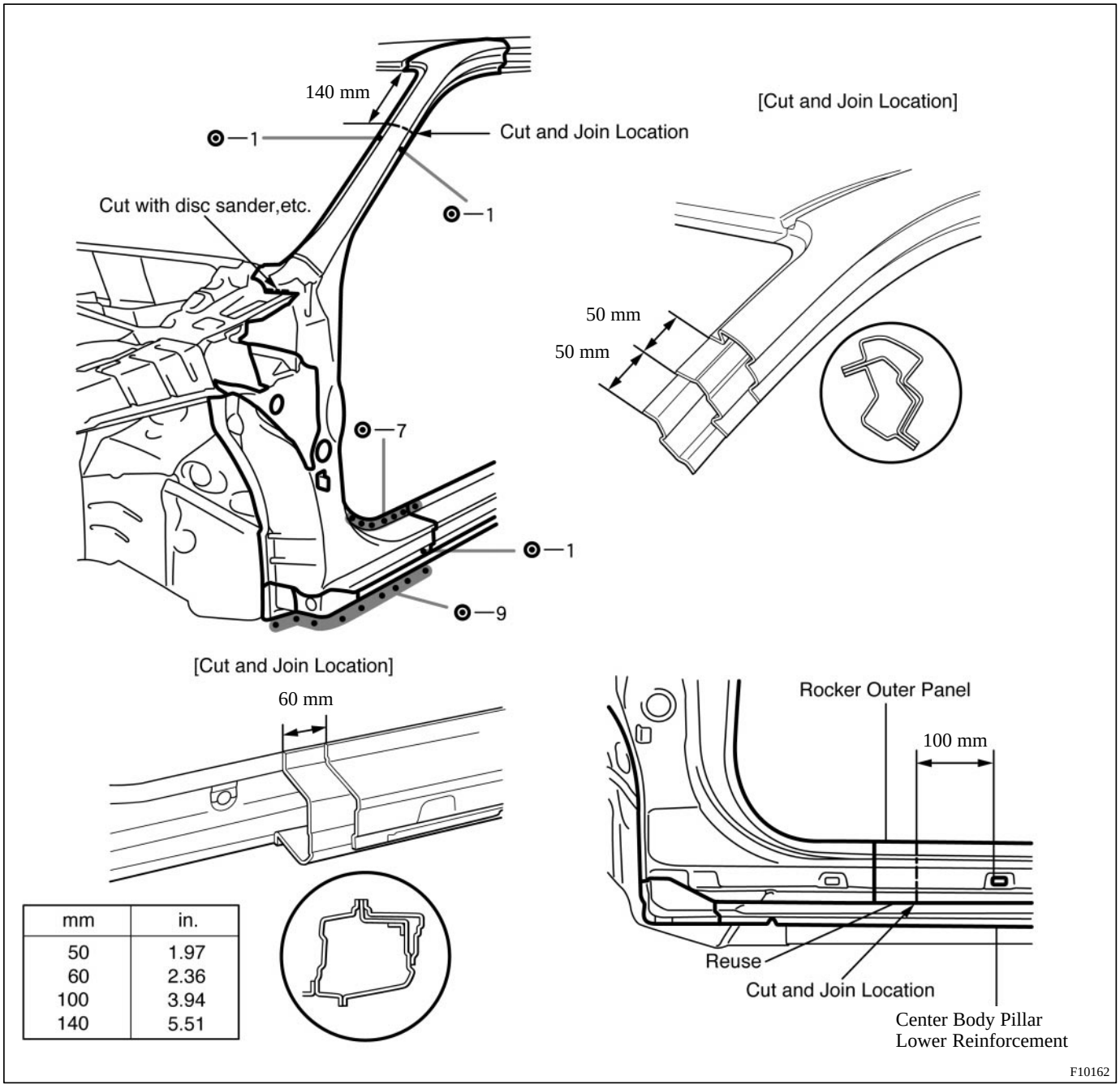

mm	in.
50	1.97
60	2.36
100	3.94
140	5.51

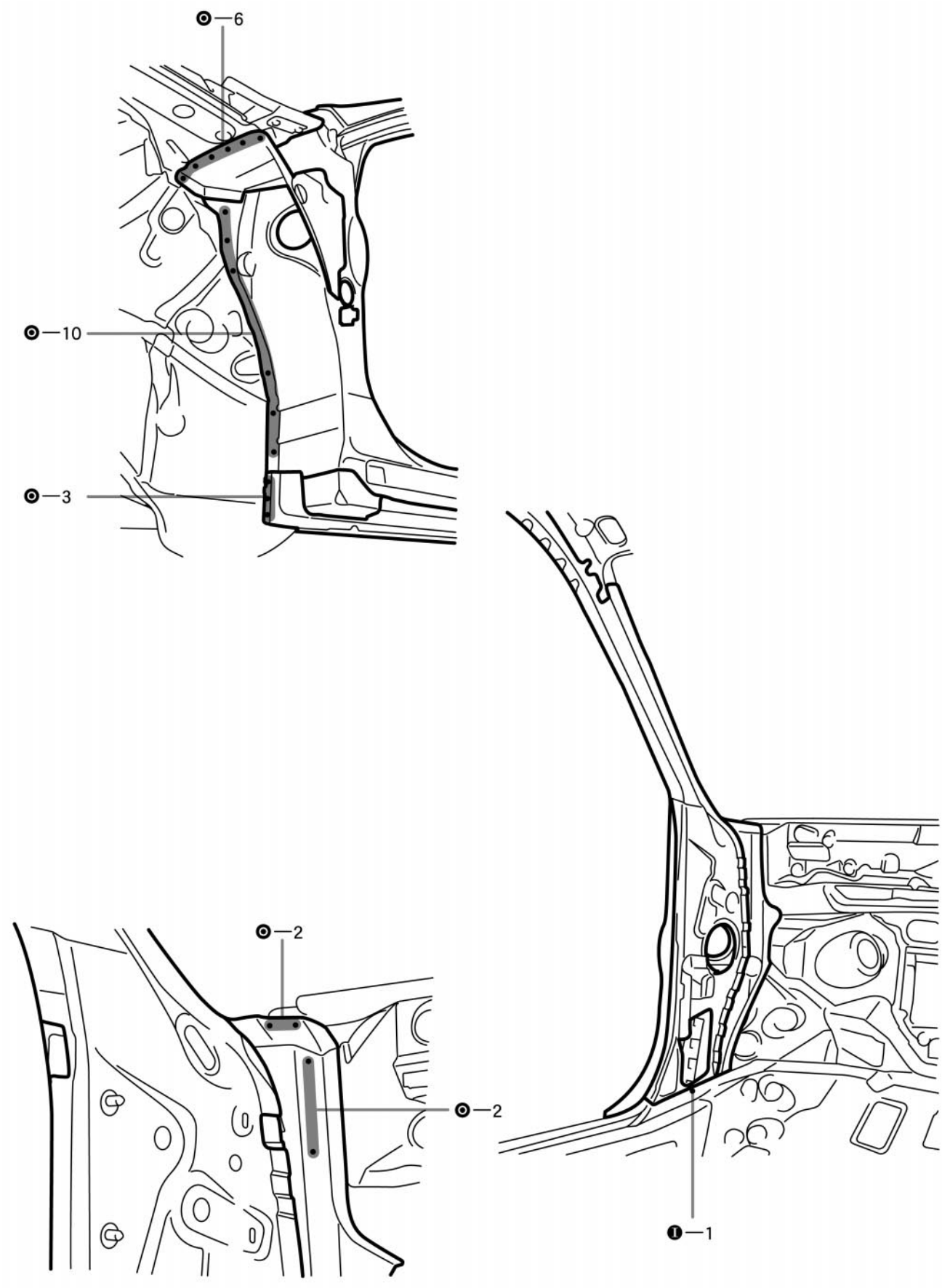

F10163

3. INSTALL FRONT BODY PILLAR

HINT:
Inspect the fitting of the front door, front fender and windshield glass, etc., before welding, since this affects the appearance of the finish.

(a) Before temporarily installing the new parts, weld the front pillar lower reinforcement, center body pillar lower reinforcement and front body inner pillar with standard points.

(b) After welding the front pillar lower reinforcement, center body pillar lower reinforcement and front body inner pillar to the vehicle, install the outer pillar.

(c) Temporarily install the new parts and measure each part in accordance with the body demension diagram.

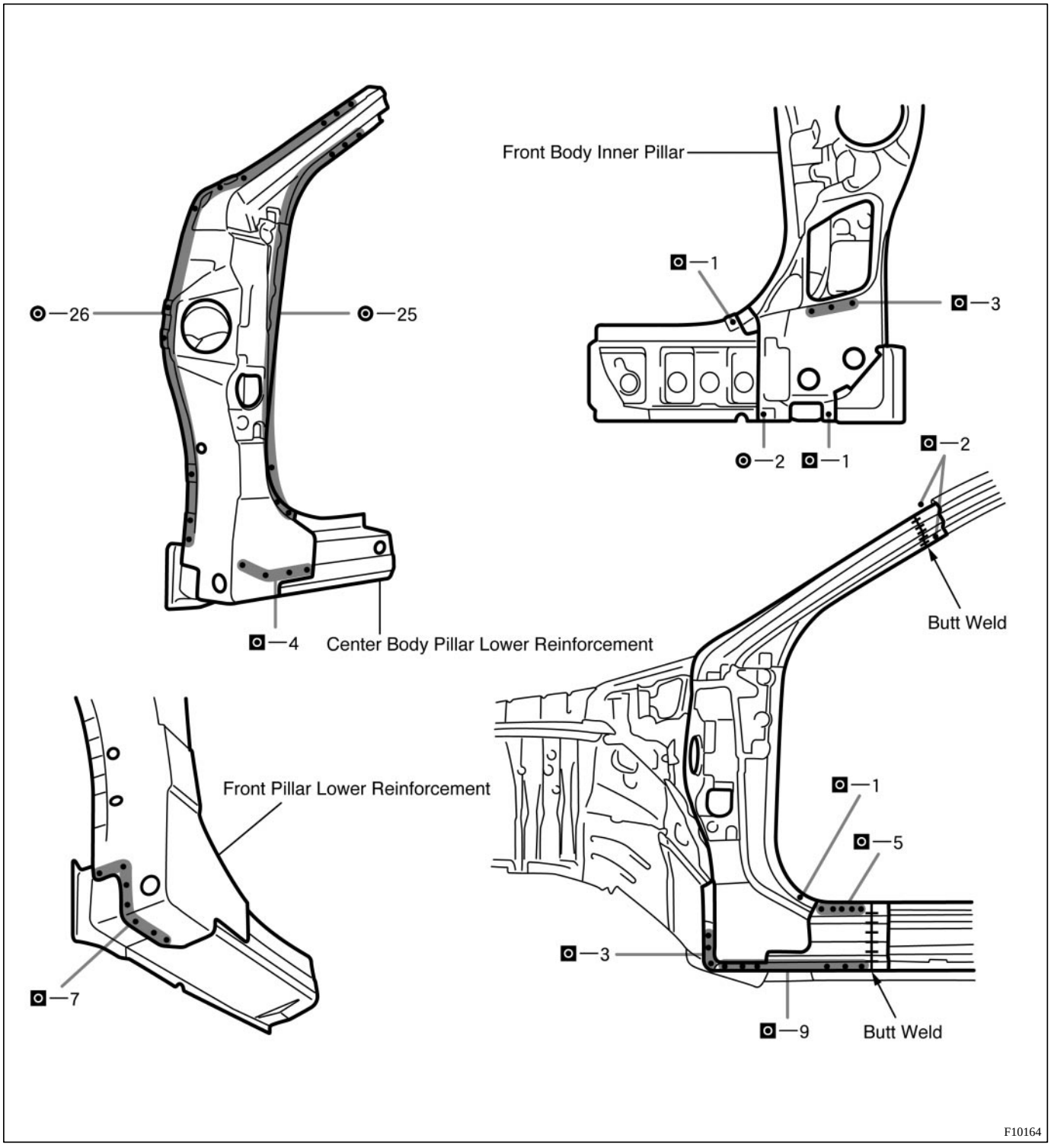

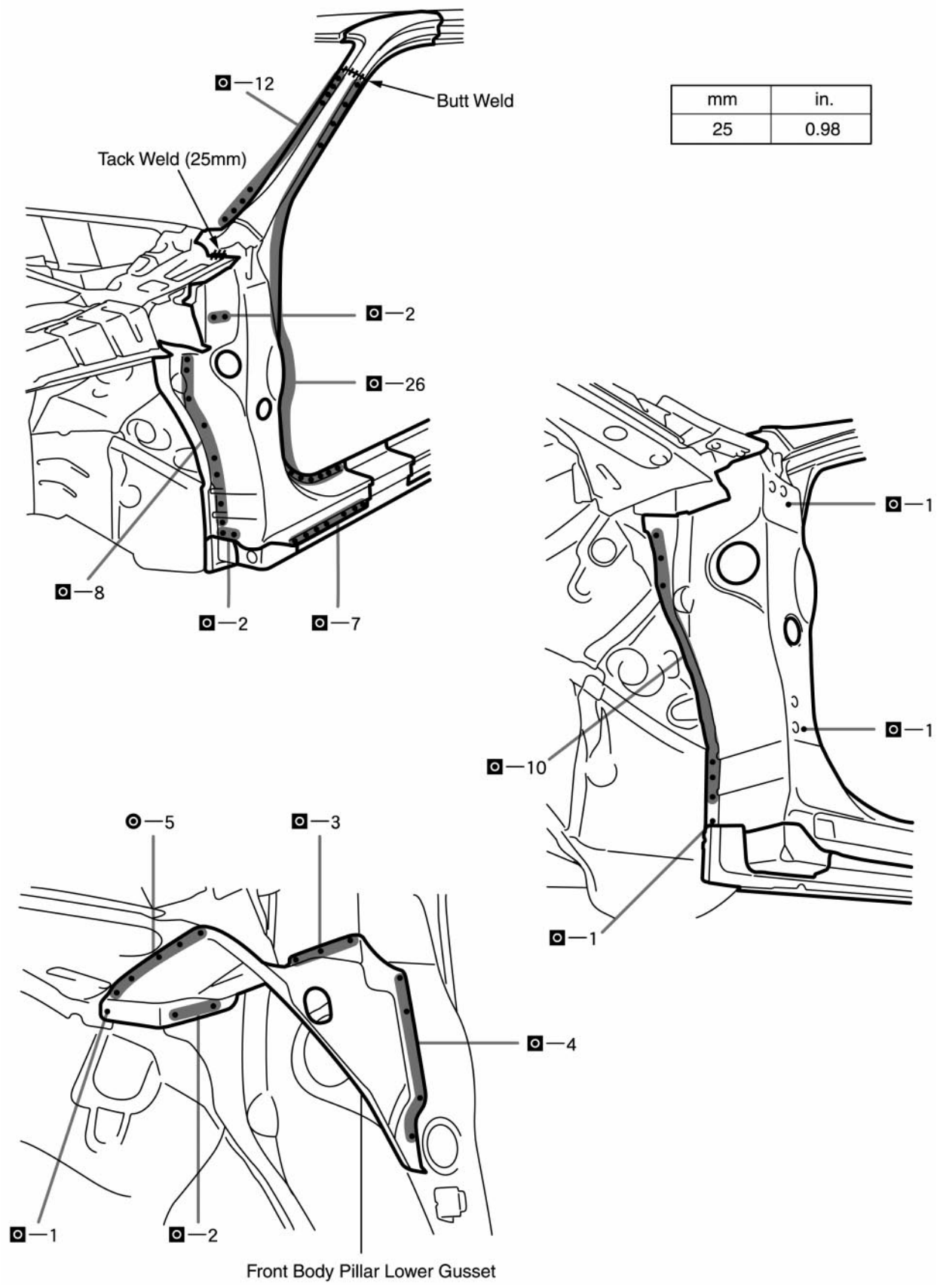

mm	in.
25	0.98

F10165

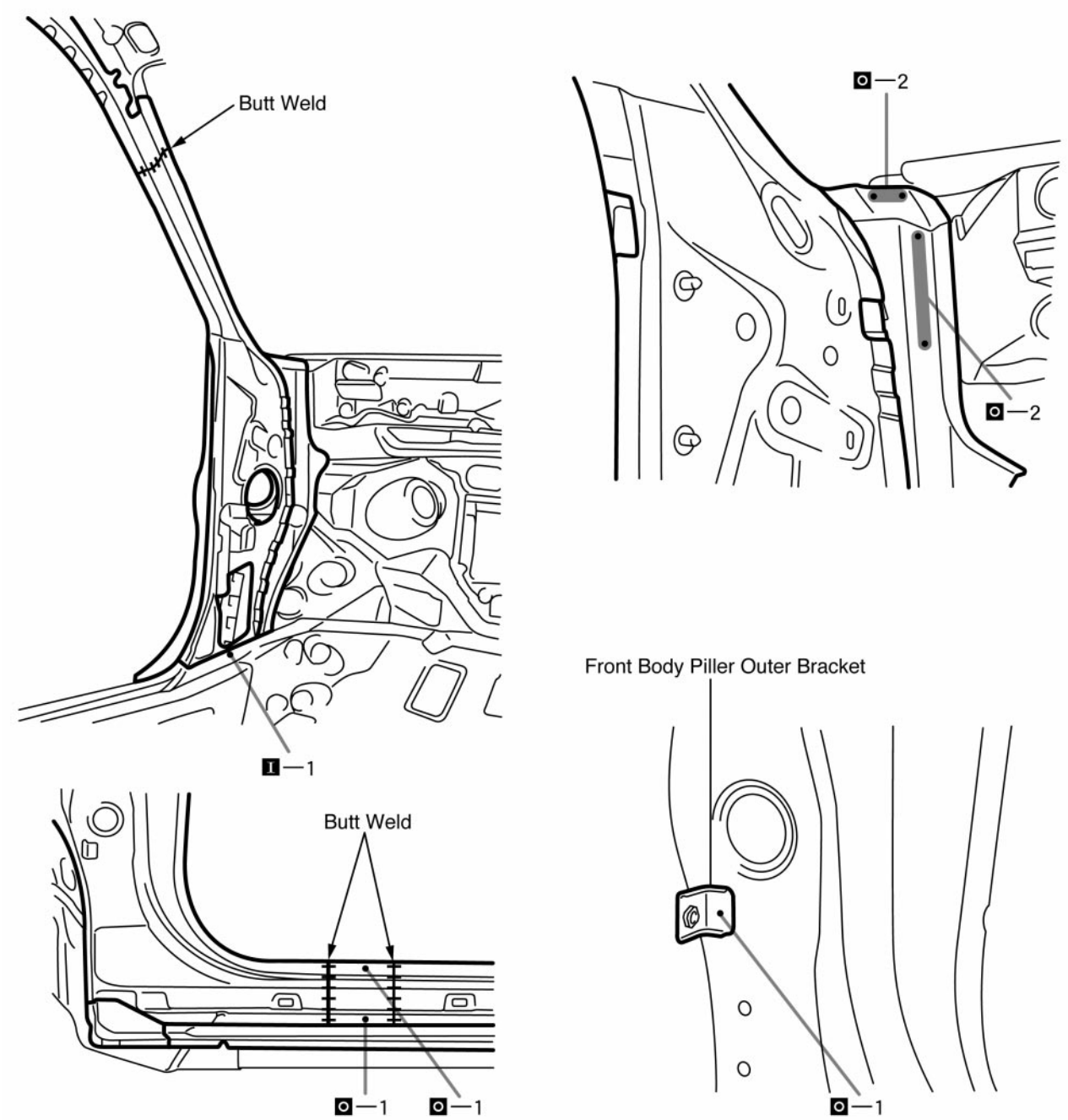

4. **MEASURING OPENING PORTION DIMENSIONS (See page BP-84)**
5. **INSTALL COWL TOP SIDE PANEL (See page BP-18)**
6. **APPLYING SEALER TO THE ENGINE COMPARTMENT (See page PC-1)**
7. **APPLYING SEALER TO THE INSIDE OF THE VEHICLE (See page PC-1)**
8. **APPLYING UNDER COATING (See page PC-6)**
9. **CHARGING THE POLYURTHANE FOAM (See page PC-8)**
10. **APPLYING ANTI-RUST AGENT**

(a) After applying the top coat layer, apply the anti-rust agent to the inside of the necked section structural weld spots.

FRONT CROSSMEMBER SIDE GUSSET (ASSY)

REPLACEMENT

1. REMOVE RADIATOR UPPER SUPPORT (See page BP-1)
2. REMOVE FRONT CROSSMEMBER SIDE GUSSET

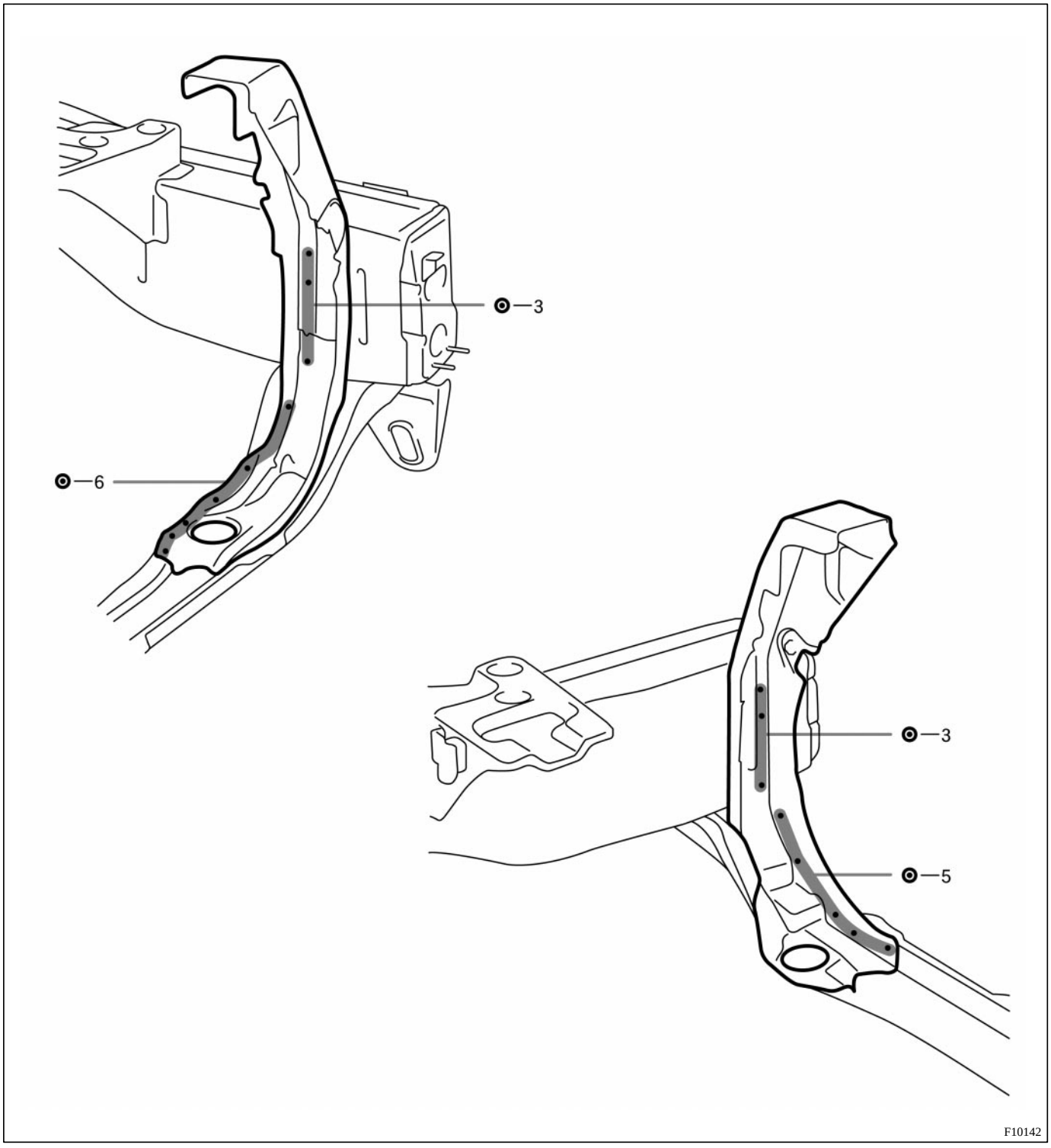

3. INSTALL FRONT CROSSMEMBER SIDE GUSSET

(a) Temporarily install the new parts and measure each part in accordance with the body dimension diagram.

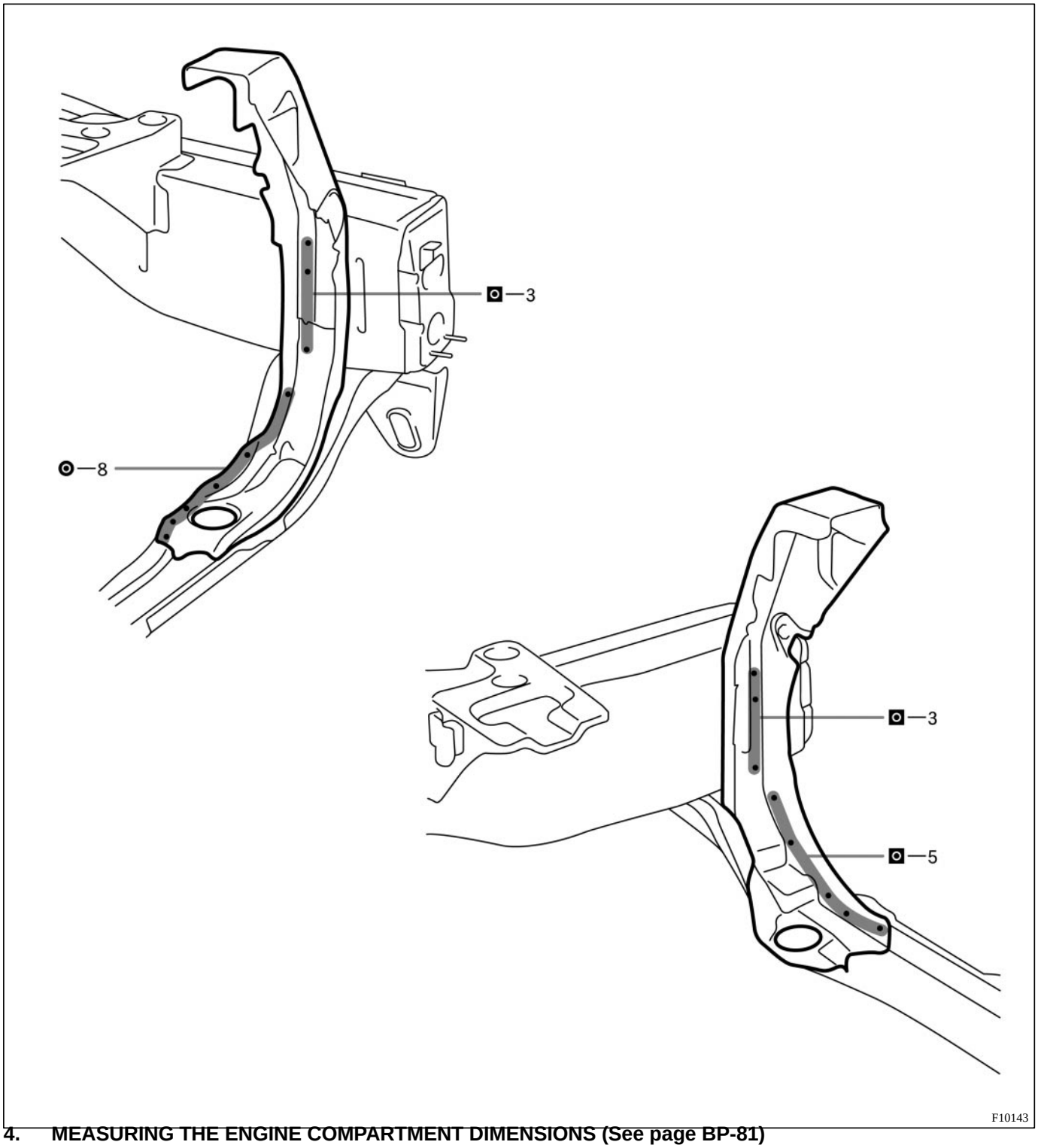

4. MEASURING THE ENGINE COMPARTMENT DIMENSIONS (See page BP-81)

5. INSTALL RADIATOR UPPER SUPPORT (See page BP-1)

6. APPLYING SEALER TO THE ENGINE COMPARTMENT (See page PC-1)

7. APPLYING ANTI-RUST AGENT

(a) After applying the top coat layer, apply the anti-rust agent to the inside of the necked section structural weld spots.

FRONT DOOR OUTER PANEL (ASSY)

REPLACEMENT

1. REMOVE FRONT DOOR OUTER PANEL

(a) Before removing the outer panel, make the installation position with a tape.

(b) After grinding off the hemming location, remove the outer panel.

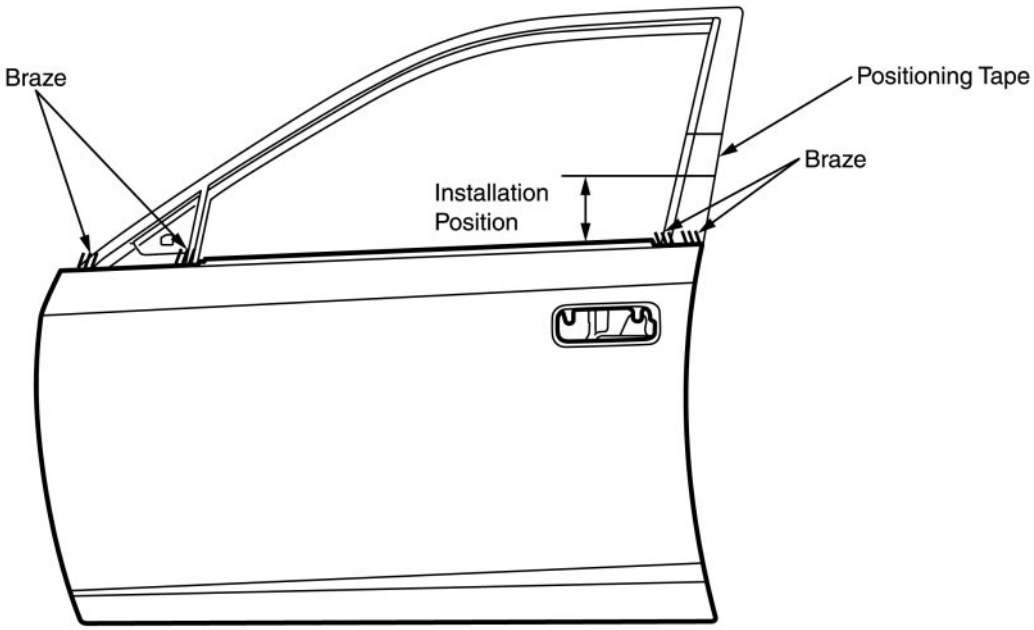

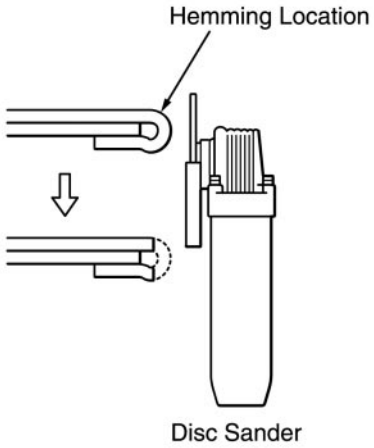

F10171

2. INSTALL FRONT DOOR OUTER PANEL

(a) Before temporarily installing the new parts, apply body sealer to the reinforcement, side impact protection beam and back side of the new parts.

HINT:

- Apply just enough sealer for the reinforcement and side impact beam to touch the new panel. Apply sealer evenly around the flange area, about 10 mm (0.39 in.) from the edge, as shown.
- For other sealing points, refer to section PC.

(b) Bend the flange hem about 30° with a hammer and dolly, then fasten tightly with a hemming tool.

HINT:

- Perform hemming in three steps, being careful not to warp the panel.
- If a hemming tool cannot be used, hem with a hammer and dolly.

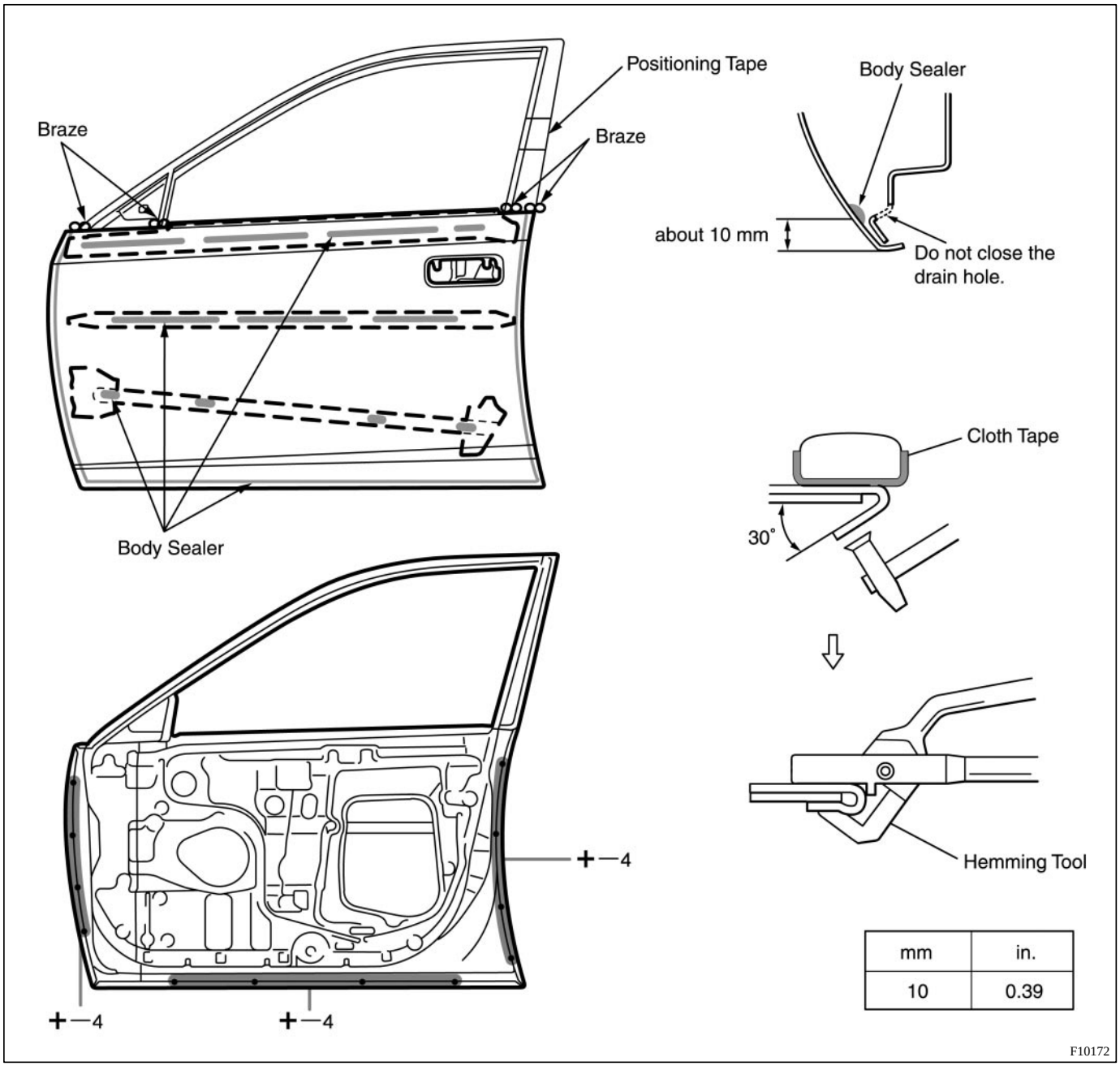

mm	in.
10	0.39

3. APPLYING SEALER TO THE DOOR PARTS (See page PC-1)

4. APPLYING ANTI-RUST AGENT

(a) After applying the top coat layer, apply the anti-rust agent to the inside of the necked section structural weld spots.

FRONT FENDER FRONT APRON (ASSY)

REPLACEMENT

1. **REMOVE RADIATOR UPPER SUPPORT (See page BP-1)**
2. **REMOVE FRONT FENDER FRONT APRON**

(a) Replace the fender apron plate at the same time.

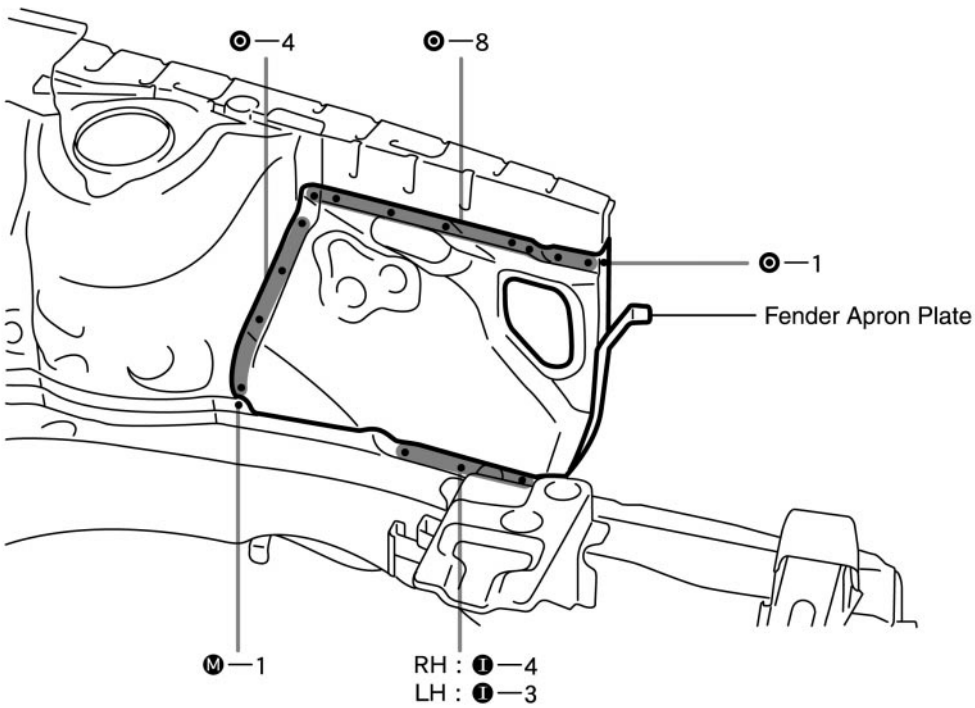

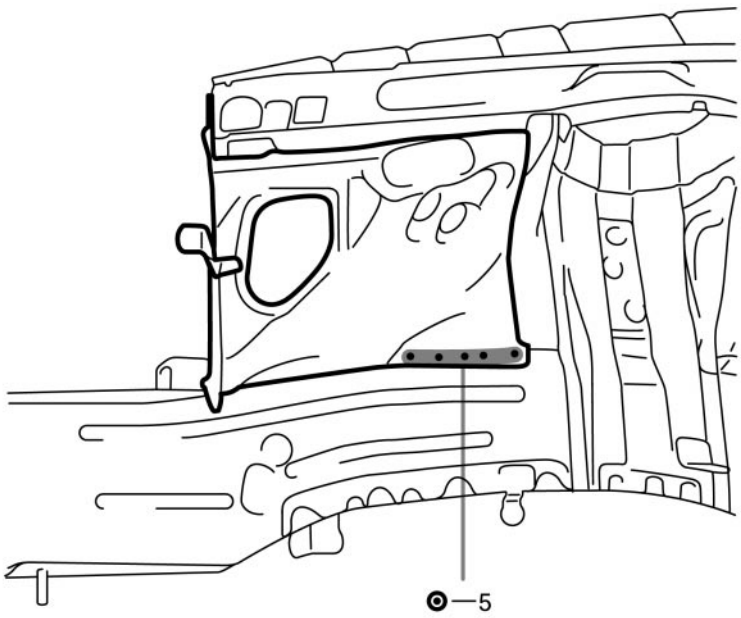

F10148

3. INSTALL FRONT FENDER FRONT APRON

(a) Temporarily install the new parts and measure each part in accordance with the body dimension diagram.

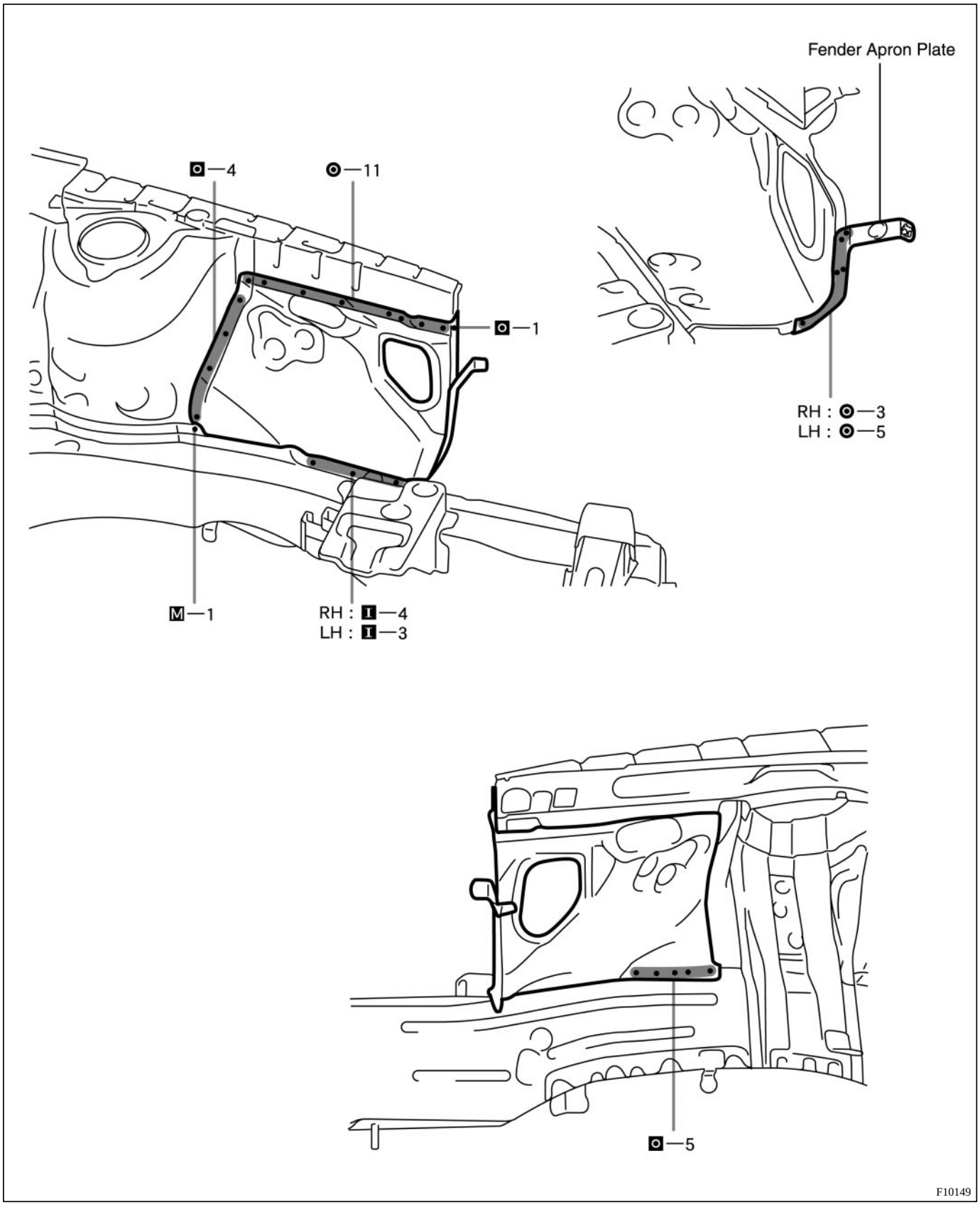

4. MEASURING THE ENGINE COMPARTMENT DIMENSIONS (See page BP-81)

5. INSTALL RADIATOR UPPER SUPPORT (See page BP-1)

6. APPLYING SEALER TO THE ENGINE COMPARTMENT (See page PC-1)

7. APPLYING UNDERCOATING (See page PC-6)

8. APPLYING ANTI-RUST AGENT

(a) After applying the top coat layer, apply the anti-rust agent to the inside of the necked section structural weld spots.

FRONT SIDE MEMBER (CUT-P)

REPLACEMENT

1. **REMOVE RADIATOR UPPER SUPPORT (See page BP-1)**
2. **REMOVE FRONT CROSSMEMBER SIDE GUSSET (See page BP-3)**
3. **REMOVE FRONT CROSSMEMBER (See page BP-5)**
4. **REMOVE FRONT SIDE MEMBER**

(a) Cut and join the parts at the locations as shown below.

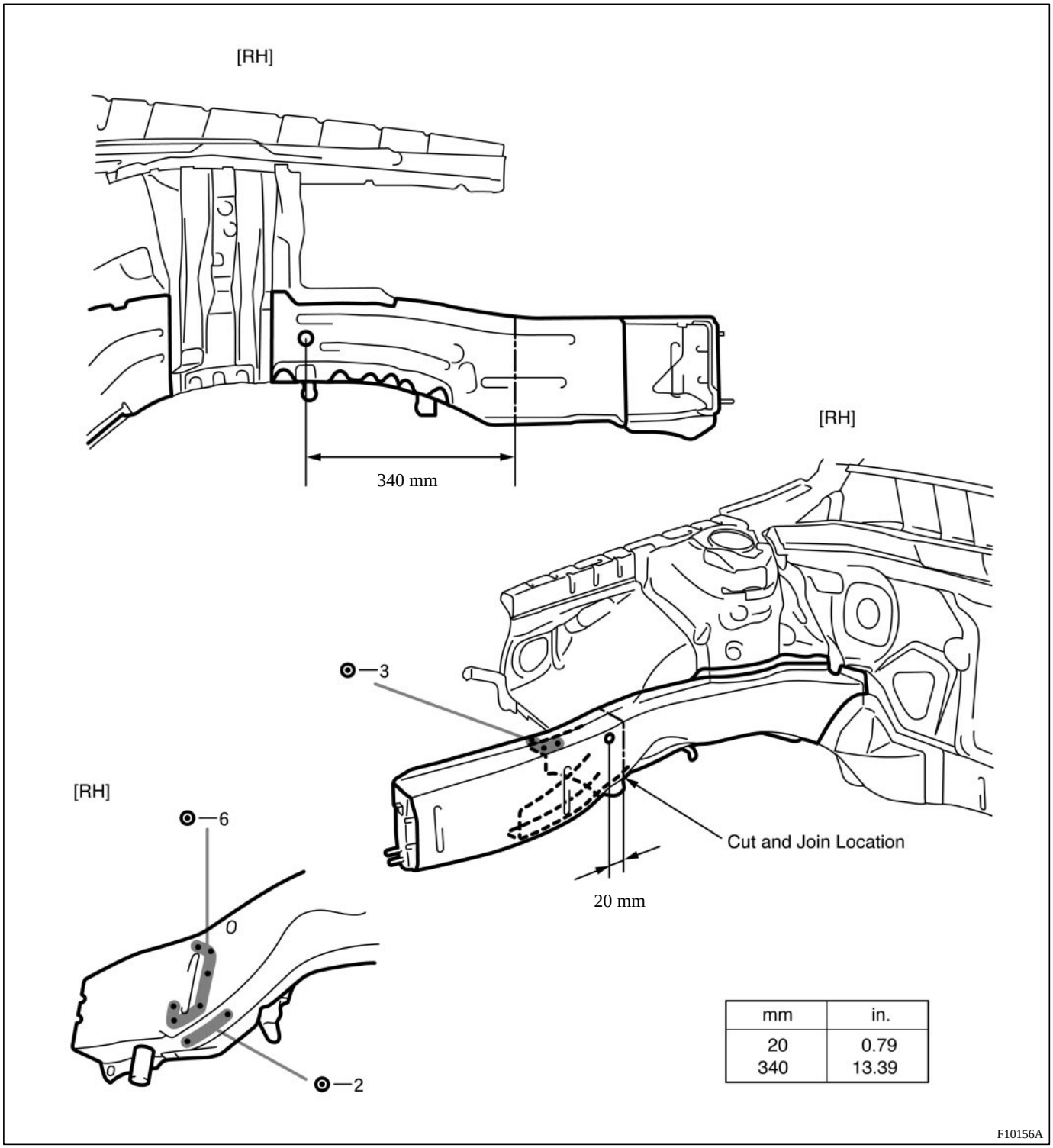

mm	in.
20	0.79
340	13.39

F10156A

(b) LH only: After removing the battery carrier support, cut and join the front side member.

HINT:
Leave the reinforcement to the vehicle side.

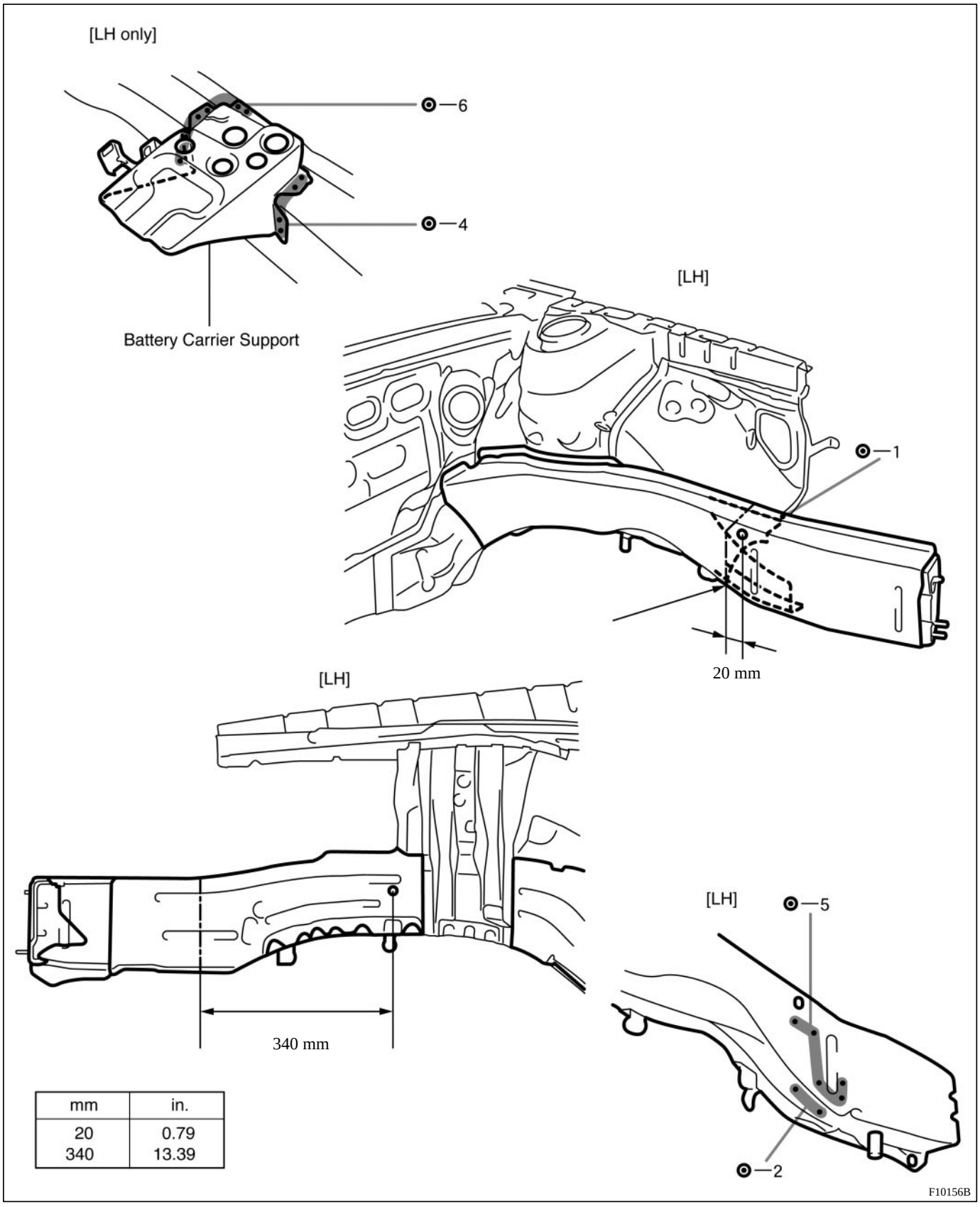

mm	in.
20	0.79
340	13.39

5. INSTALL FRONT SIDE MEMBER

(a) Temporarily install the new parts and measure each part in accordance with the body dimension diagram.

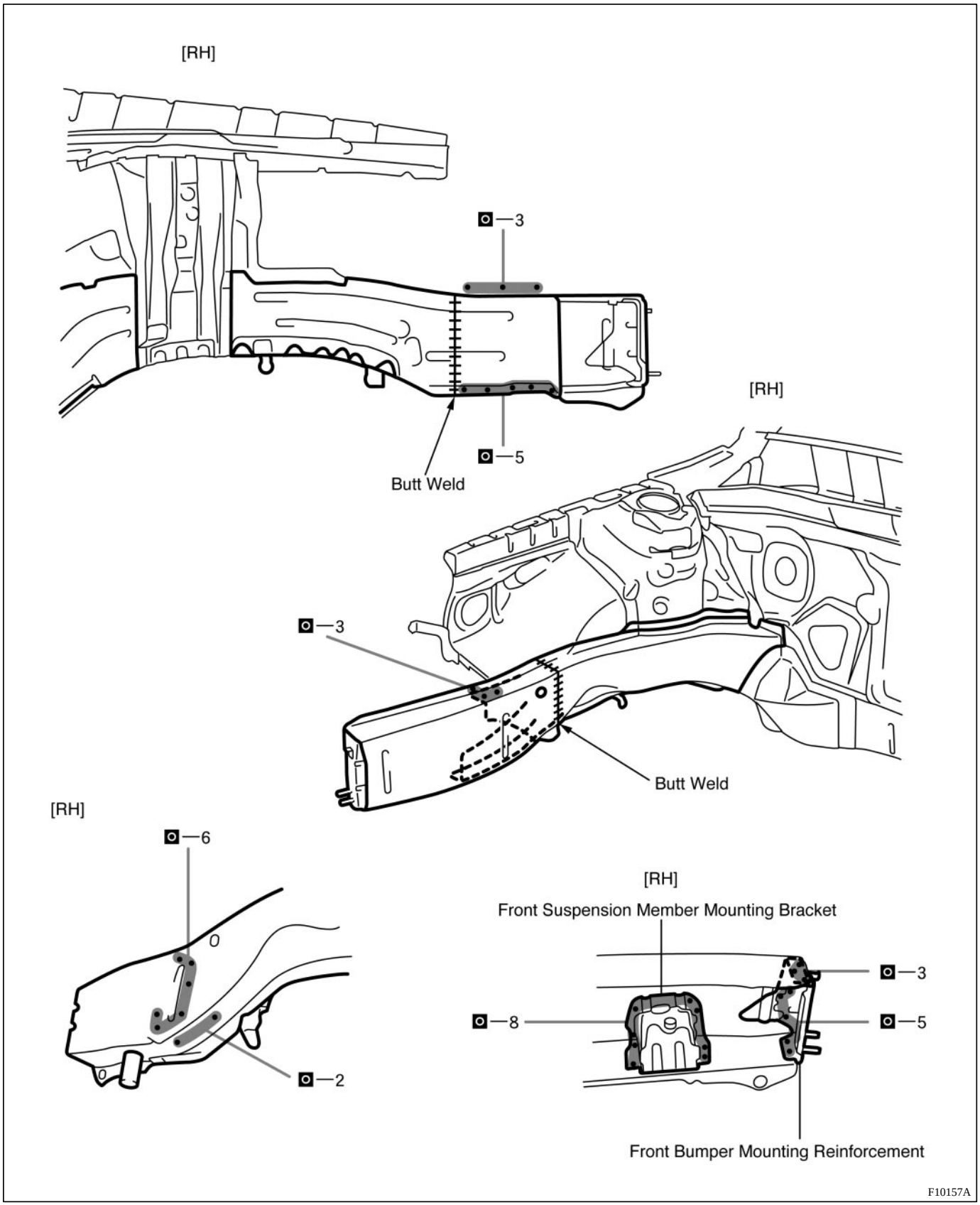

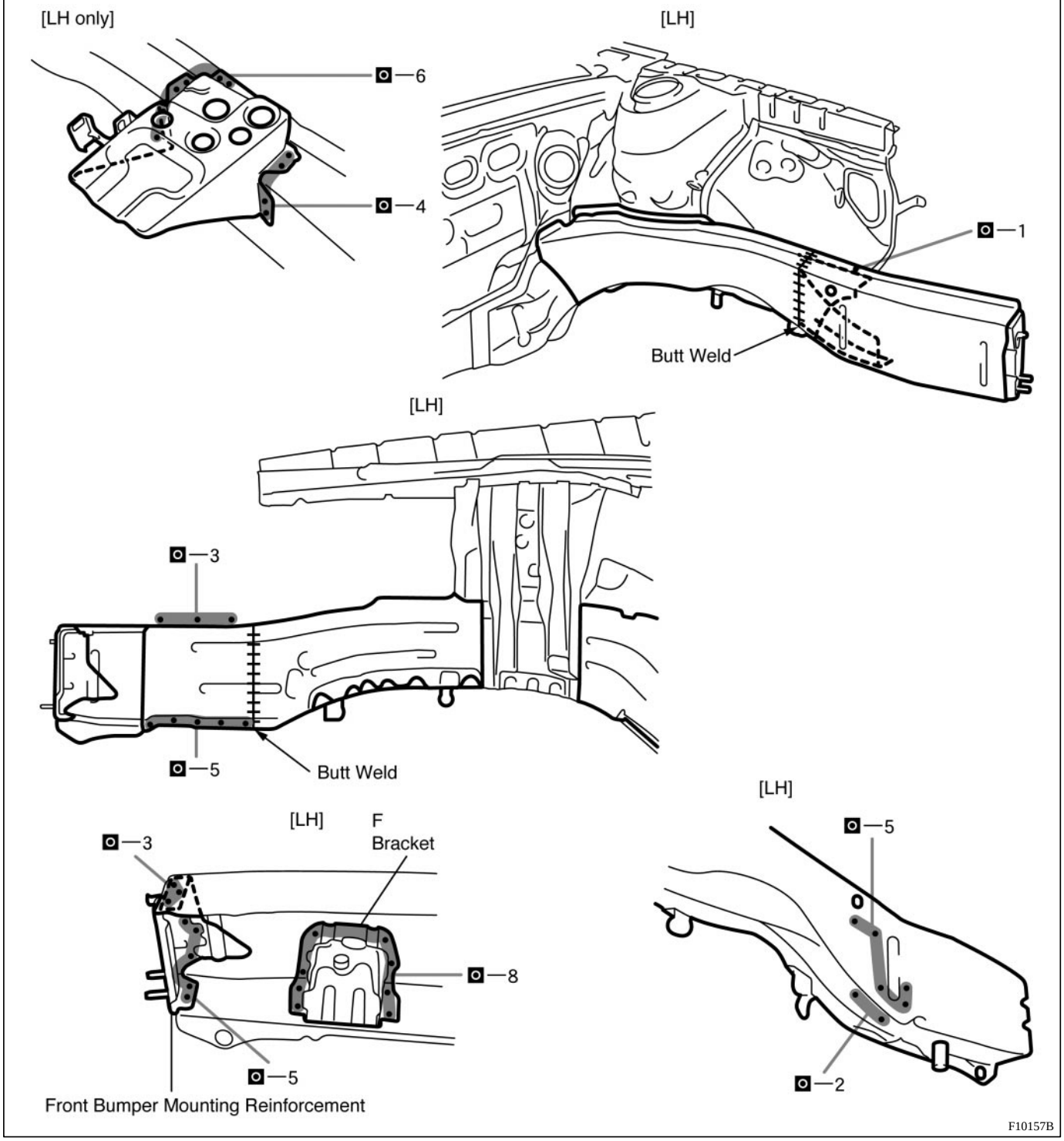

6. **MEASURING THE ENGINE COMPARTMENT DIMENSIONS (See page BP-81)**
7. **MEASURING THE UNDER BODY DIMENSIONS (See page BP-85)**
8. **INSTALL FRONT CROSSMEMBER (See page BP-5)**
9. **INSTALL FRONT CROSSMEMBER SIDE GUSSET (See page BP-3)**
10. **INSTALL RADIATOR UPPER SUPPORT (See page BP-1)**
11. **APPLYING SEALER TO THE ENGINE COMPARTMENT (See page PC-1)**
12. **APPLYING ANTI-RUST AGENT (See page PC-7)**

(a) After applying the top coat layer, apply the anti-rust agent to the inside of the necked section structural weld spots.

LUGGAGE COMPARTMENT OPENING TROUGH (ASSY)

REPLACEMENT

1. REMOVE LUGGAGE COMPARTMENT OPENING TROUGH

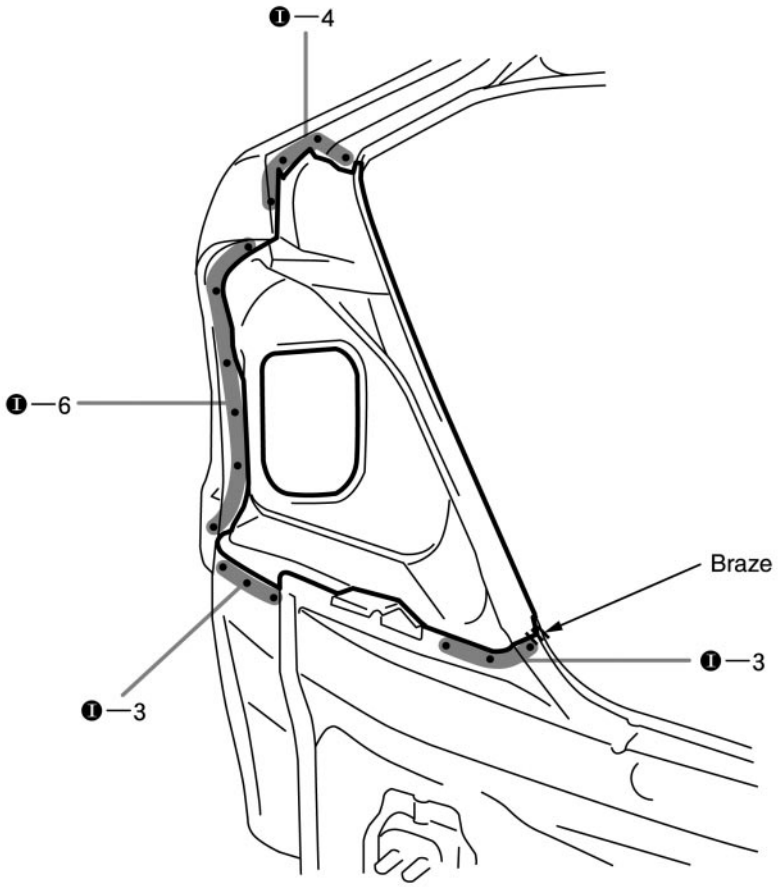

F10189

2. INSTALL LUGGAGE COMPARTMENT OPENING TROUGH

HINT:
Inspect the fitting of the luggage compartment door and rear combination light, etc., before welding, since this affects the appearance of the finish.

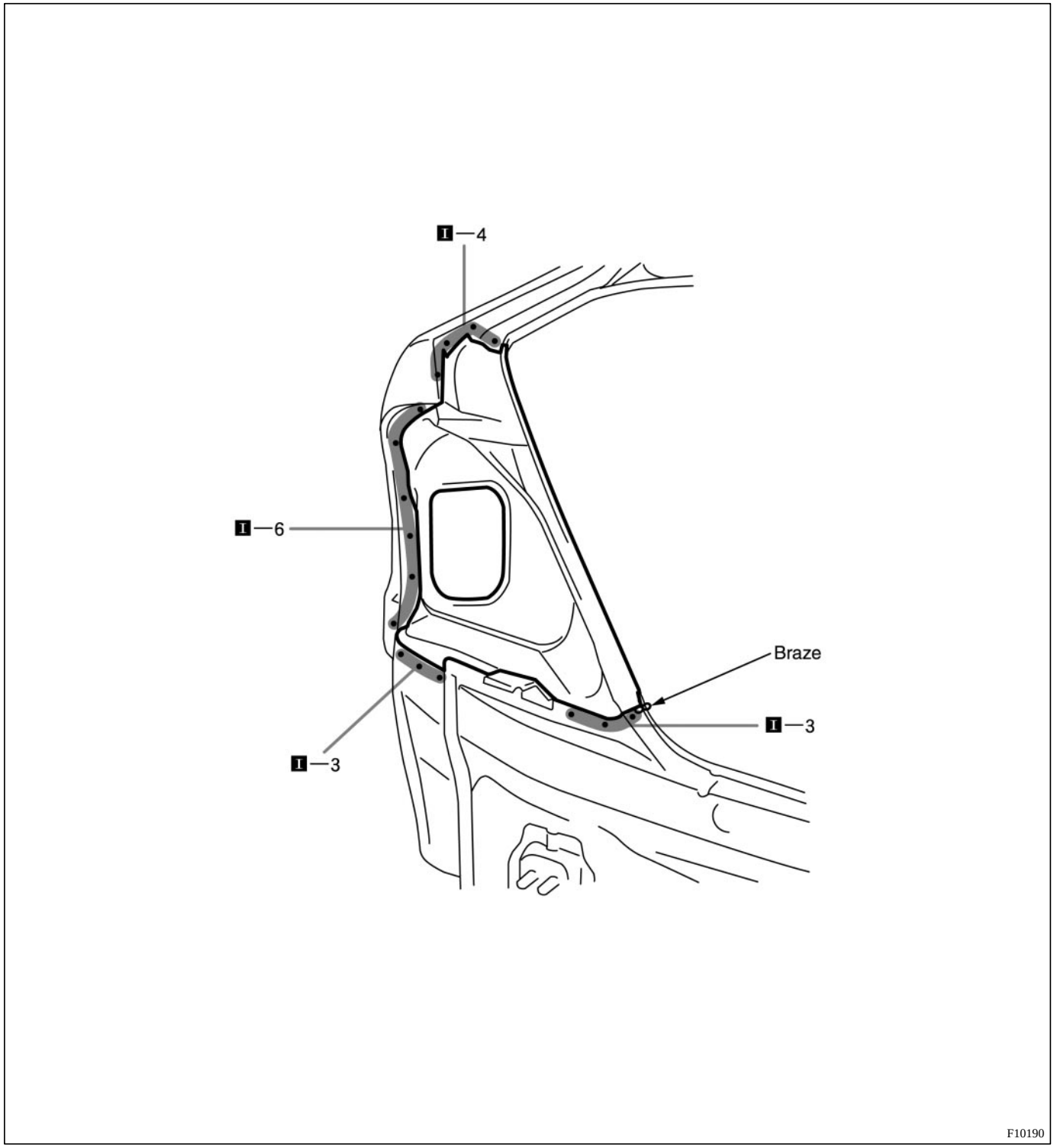

3. APPLYING SEALER TO THE INSIDE OF THE VEHICLE (See page PC-1)

4. APPLYING SEALER TO THE REAR LUGGAGE COMPARTMENT (See page PC-1)

5. APPLYING ANTI-RUST AGENT

(a) After applying the top coat layer, apply the anti-rust agent to the inside of the necked section structural weld spots.

QUARTER WHEEL HOUSING OUTER PANEL (ASSY): Left Side

REPLACEMENT

1. **REMOVE QUARTER PANEL (See page BP-49)**
2. **REMOVE ROCKER OUTER EXTENSION (See page BP-47)**
3. **REMOVE QUARTER WHEEL HOUSING OUTER PANEL**

(a) Remove the roof side outer panel at the location shown in the below figure and remove the quarter wheel housing outer panel.

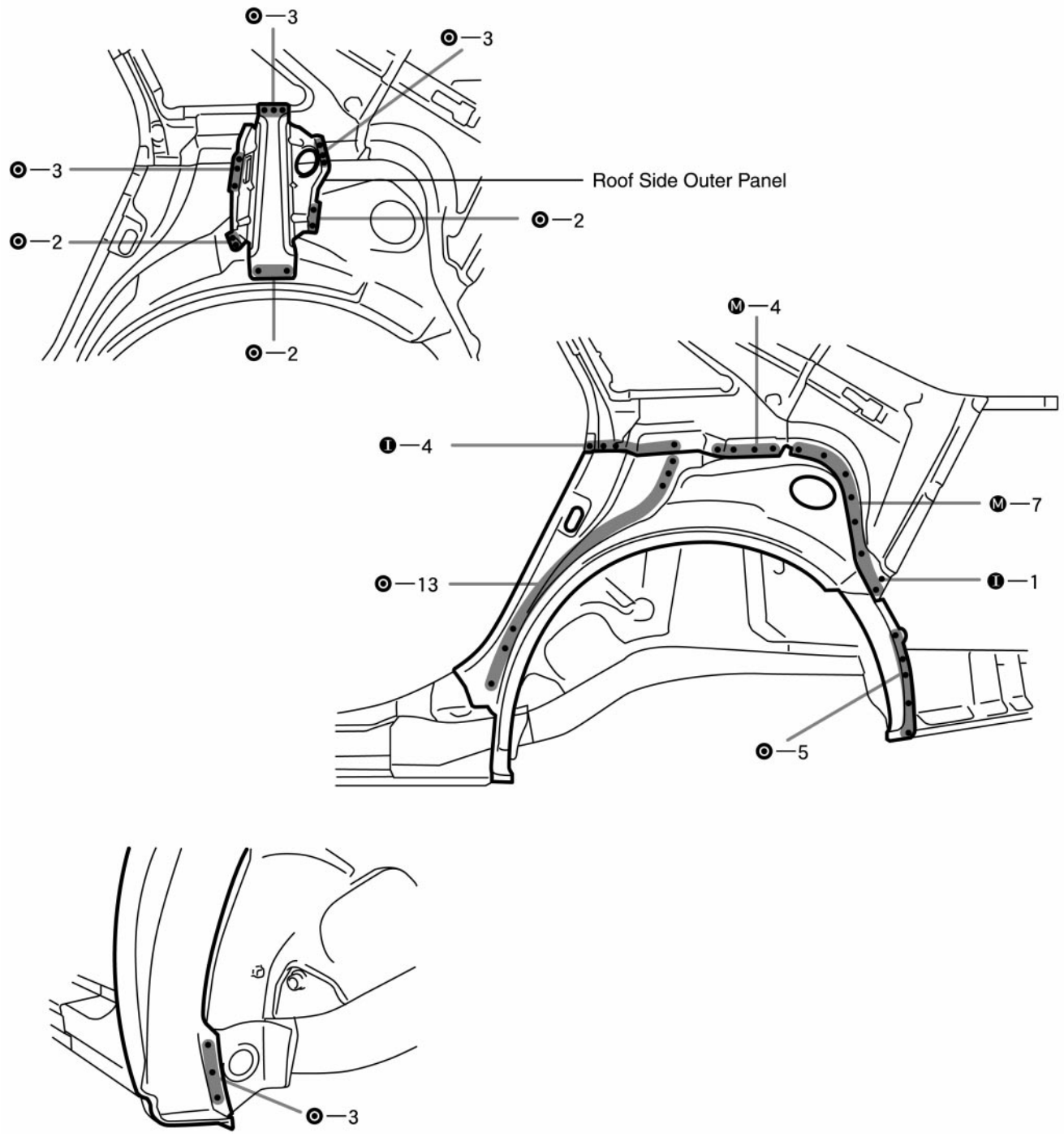

4. INSTALL QUARTER WHEEL HOUSING OUTER PANEL

HINT:
Temporarily install the quarter panel and inspect the fitting before welding, since this affects the appearance of the finish.

(a) Determine the position of the new parts by the assembly marks of the inner and outer panels.

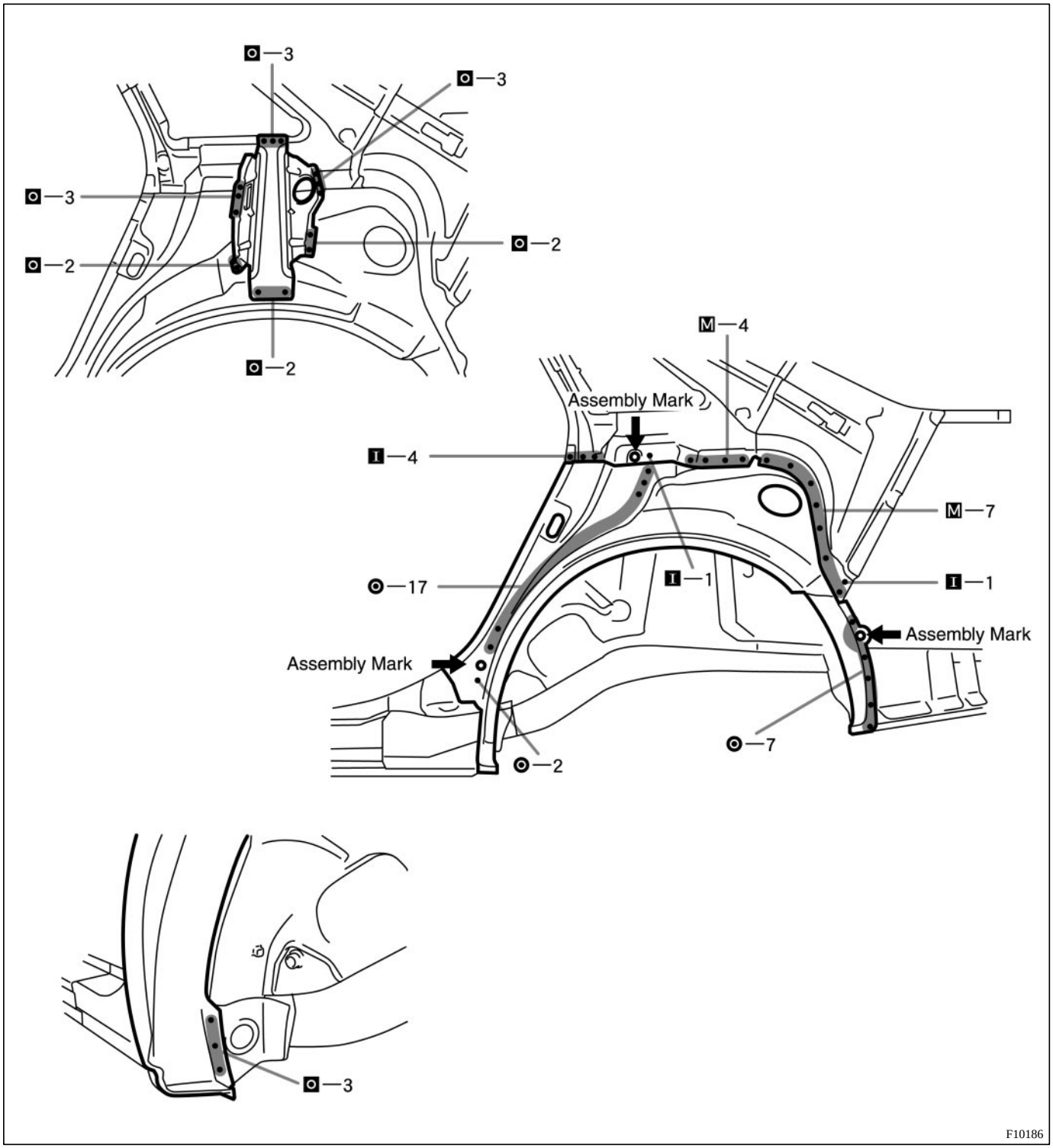

5. **INSTALL ROCKER OUTER EXTENSION (See page BP-47)**
6. **INSTALL QUARTER PANEL (See page BP-49)**
7. **APPLYING SEALER TO THE INSIDE OF THE VEHICLE (See page PC-1)**
8. **APPLYING SEALER TO THE REAR LUGGAGE COMPARTMENT (See page PC-1)**
9. **APPLYING UNDER COATING (See page PC-6)**
10. **CHARGING THE POLYURETHANE FOAM (See page PC-6)**
11. **APPLYING ANTI-RUST AGENT**

(a) After applying the top coat layer, apply the anti-rust agent to the inside of the necked section structural weld spots.

QUARTER PANEL (CUT)

REPLACEMENT

1. REMOVE QUARTER PANEL

(a) Cut and join the parts at the locations as shown below.

(b) Replace the fuel filler opening lid at the same time.

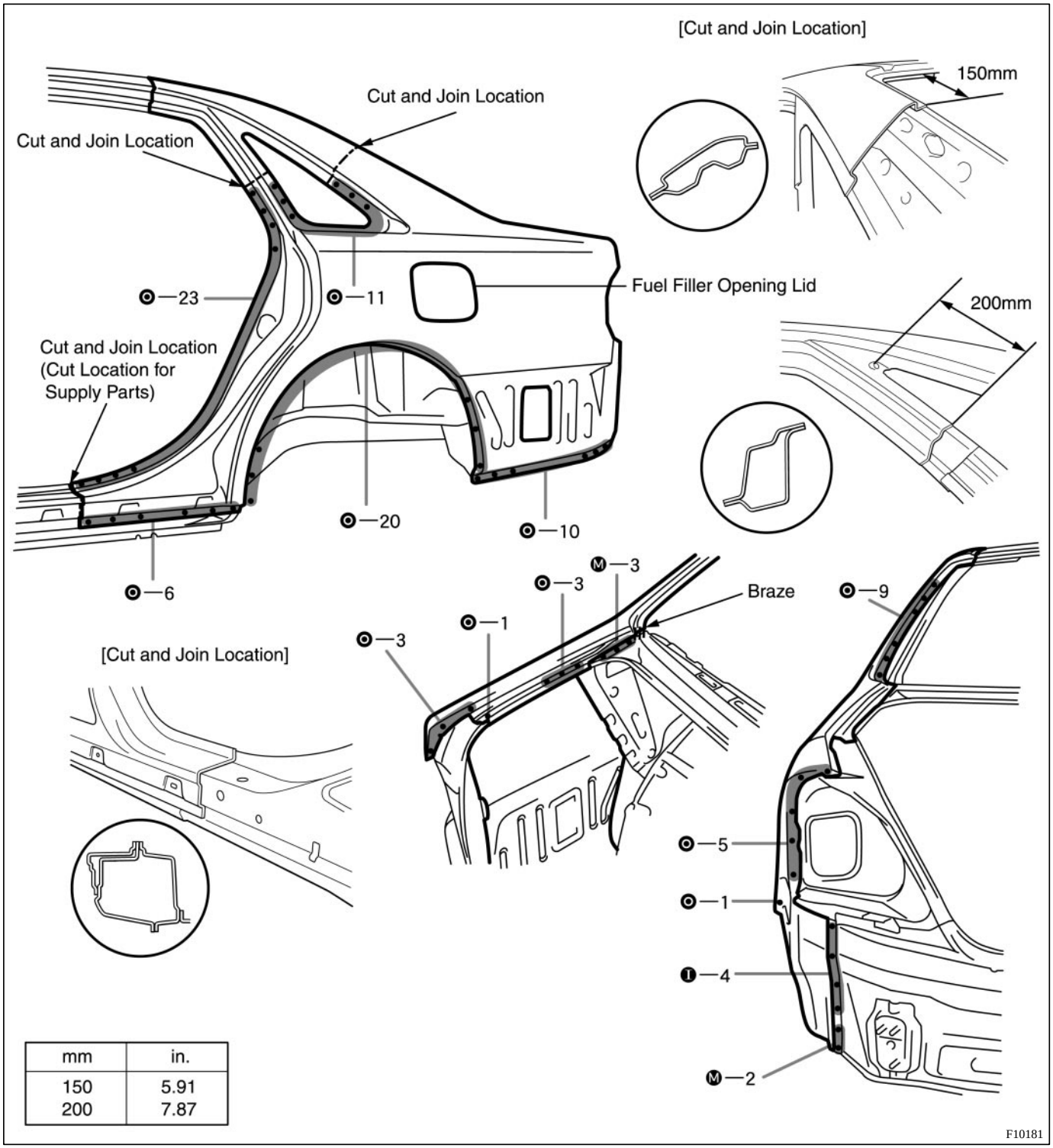

mm	in.
150	5.91
200	7.87

2. INSTALL QUATER PANEL

HINT:
Inspect the fitting of the rear door, luggage compartment door and rear combination light, etc., before welding, since this affects the appearance of the finish.

(a) Before temporarily installing the new parts, weld the quarter lock pillar reinforcement with standard points.

(b) Before temporarily installing the new parts, apply body sealer to the wheel arch.

HINT:

- Apply body sealer about 5 mm (0.20 in.) from the flange, avoiding any oozing.
- Apply sealer evenly, about 3 - 4 mm (0.12 - 0.16 in.) in diameter.
- For other sealing points, refer to section PC.

(c) Use warter proof rivets for the fuel opening lid installation.

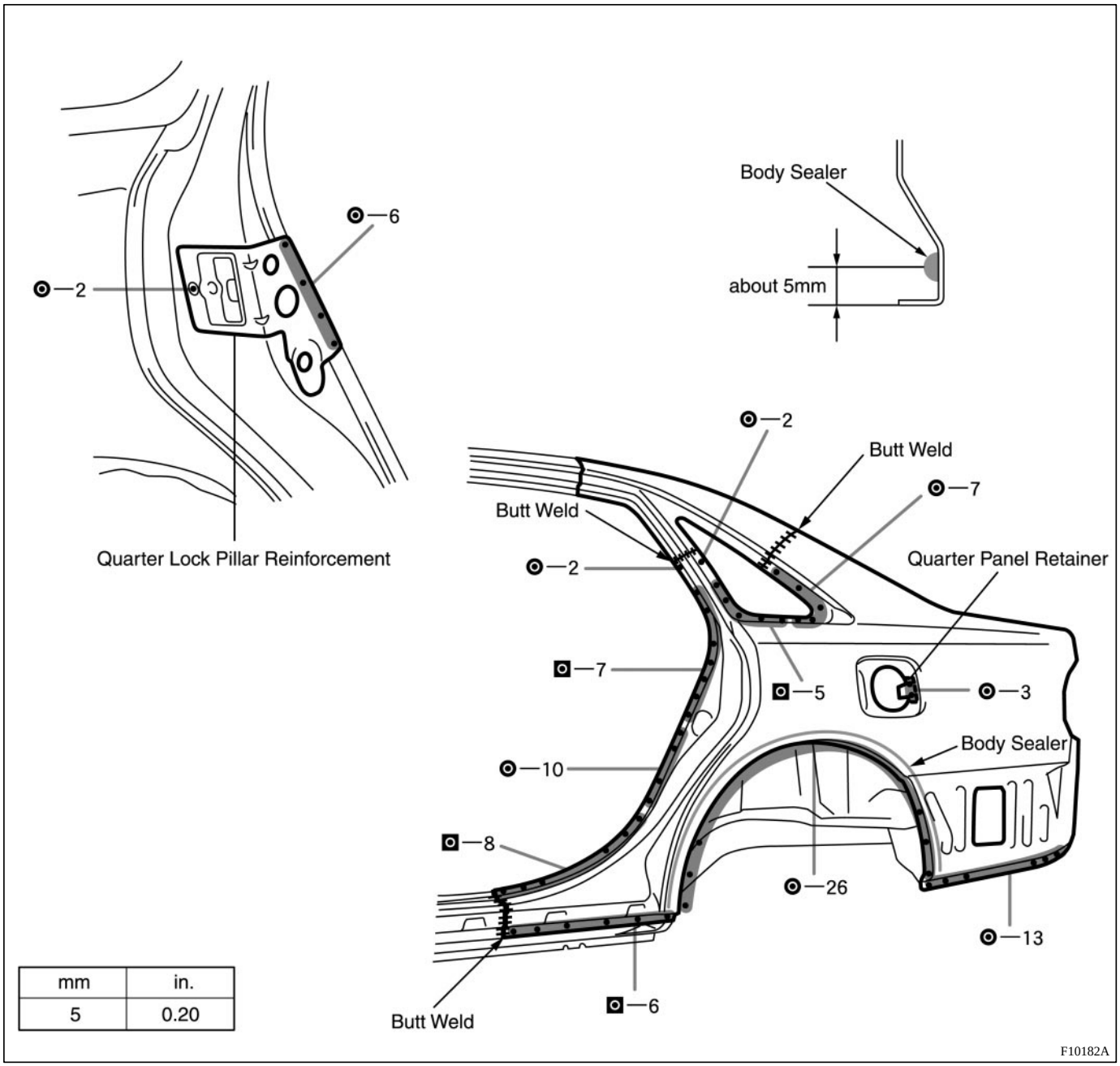

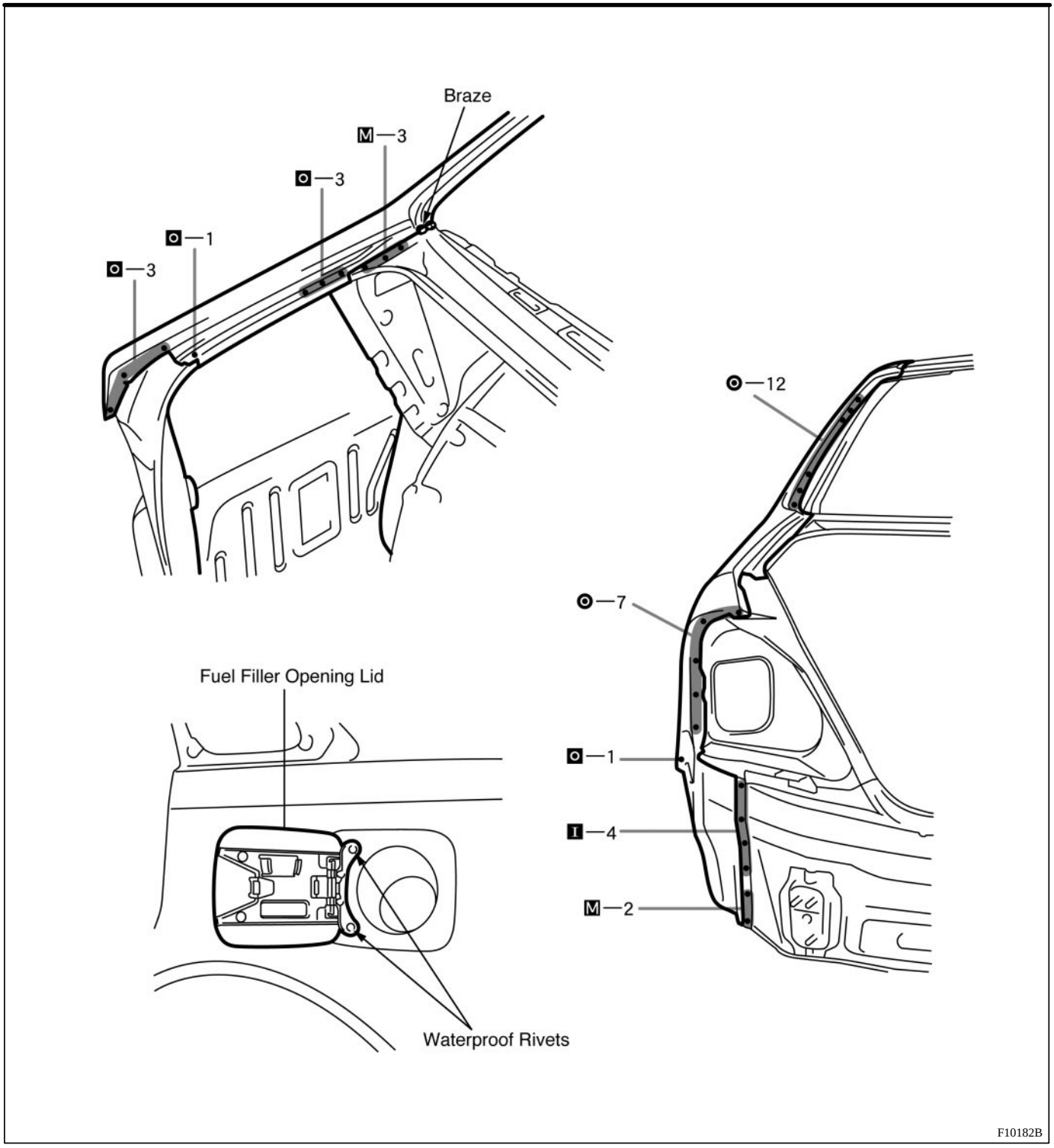

3. MEASURING THE OPENING PORTION DIMENSIONS (See page BP-84)

4. APPLYING SEALER TO THE INSIDE OF THE VEHICLE (See page PC-1)

5. APPLYING SEALER TO THE REAR LUGGAGE COMPARTMENT (See page PC-1)

6. CHARGING THE POLYURETHANE FOAM (See page PC-8)

7. APPLYING ANTI-RUST AGENT

(a) After applying the top coat layer, apply the anti-rust agent to the inside of the necked section structural weld spots.

QUARTER WHEEL HOUSING OUTER PANEL (ASSY): Right Side

REPLACEMENT

1. **REMOVE QUARTER PANEL (See page BP-49)**
2. **REMOVE ROCKER OUTER EXTENSION (See page BP-47)**
3. **REMOVE QUARTER WHEEL HOUSING OUTER PANEL**

(a) Remove the roof side outer panel at the location shown in below figure and remove the quarter wheel housing outer panel.

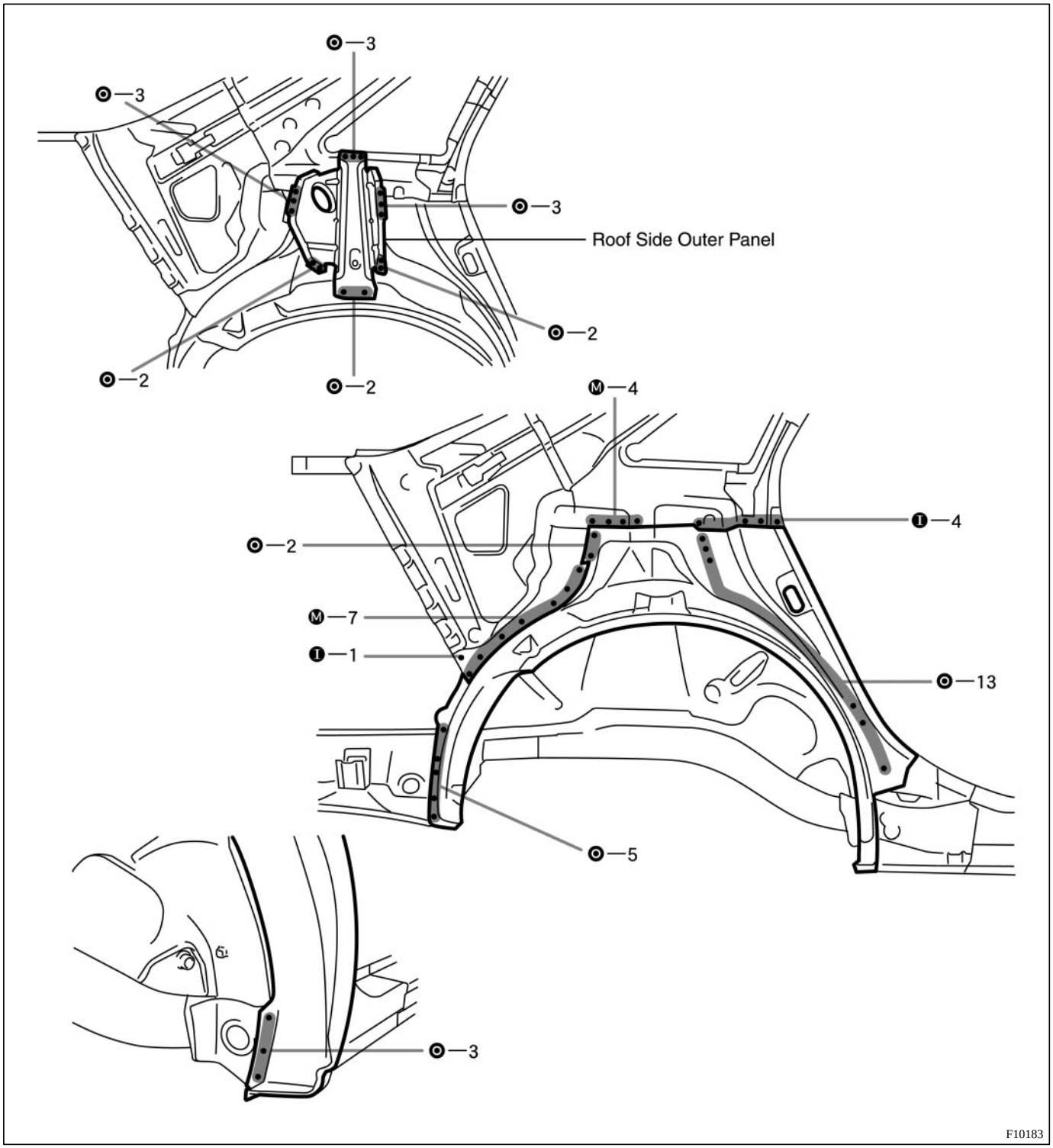

4. INSTALL QUARTER WHEEL HOUSING OUTER PANEL

HINT:
Temporarily install the quarter panel and inspect the fitting before welding, since this affects the appearance of the finish.

(a) Determine the position of the new parts by the assembly marks of the inner and outer panels.

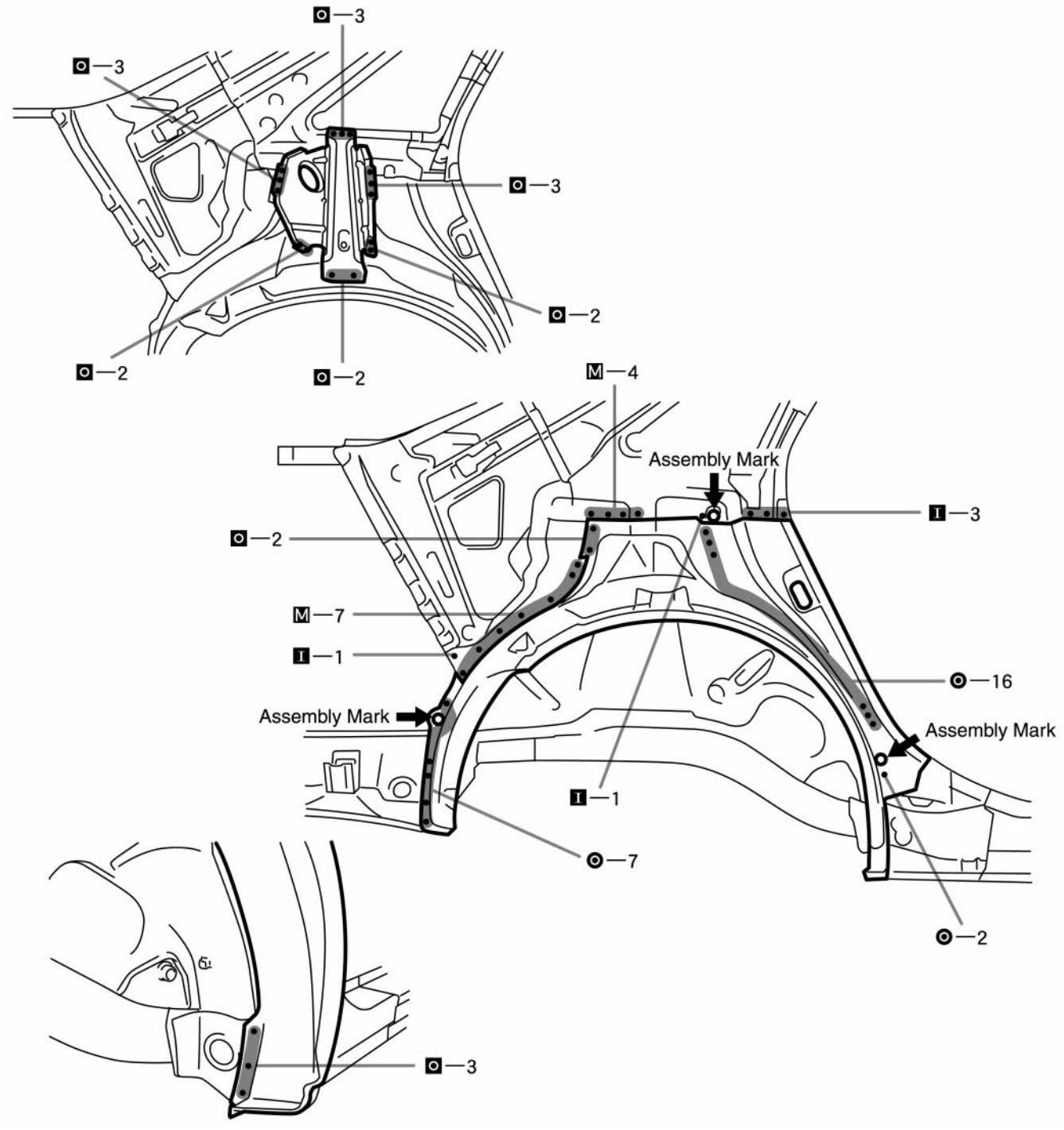

5. **INSTALL ROCKER EXTENSION (See page BP-47)**
6. **INSTALL QUARTER PANEL (See page BP-49)**
7. **APPLYING SEALER TO THE INSIDE OF THE VEHICLE (See page PC-1)**
8. **APPLYING SEALER TO THE REAR LUGGAGE COMPARTMENT (See page PC-1)**
9. **APPLYING UNDER COATING (See page PC-6)**
10. **CHARGING THE POLYURETHANE FOAM (See page PC-8)**
11. **APPLYING ANTI-RUST AGENT**

(a) After applying the top coat layer, apply the anti-rust agent to the inside of the necked section structural weld spots.

RADIATOR SUPPORT (ASSY)

REPLACEMENT

1. REMOVE RADIATOR SUPPORT

(a) After removing the front side member extension, remove the radiator support.

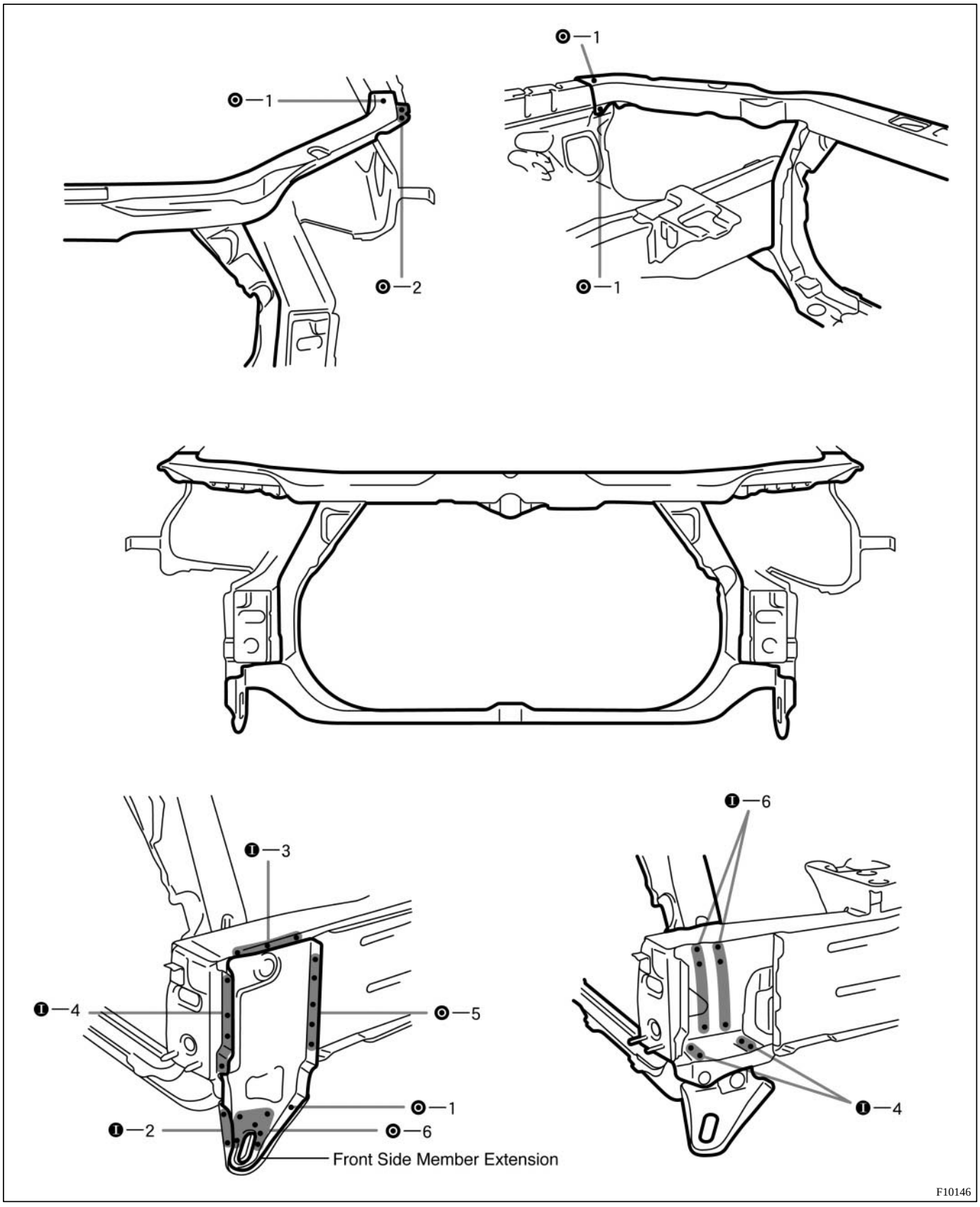

2. INSTALL RADIATOR SUPPORT

(a) Temporarily install the new parts and measure each part in accordance with the body dimension diagram.

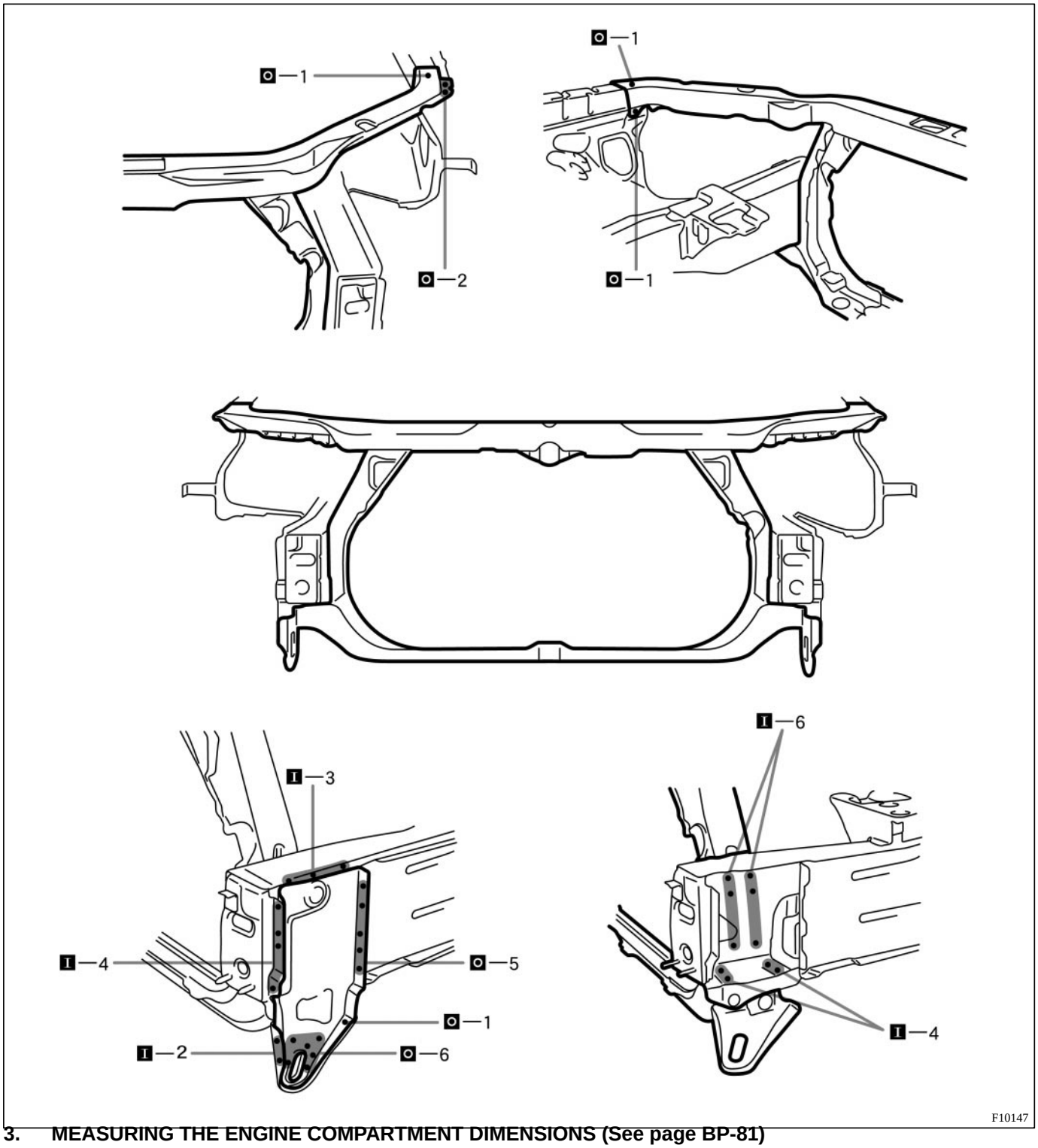

3. MEASURING THE ENGINE COMPARTMENT DIMENSIONS (See page BP-81)

4. MEASURING THE UNDER BODY DIMENSIONS (See page BP-85)

5. APPLYING SEALER TO THE ENGINE COMPARTMENT (See page PC-1)

6. APPLYING ANTI-RUST AGENT

(a) After applying the top coat layer, apply the anti-rust agent to the inside of the necked section structural weld spots.

RADIATOR UPPER SUPPORT (ASSY)

REPLACEMENT

1. REMOVE RADIATOR UPPER SUPPORT

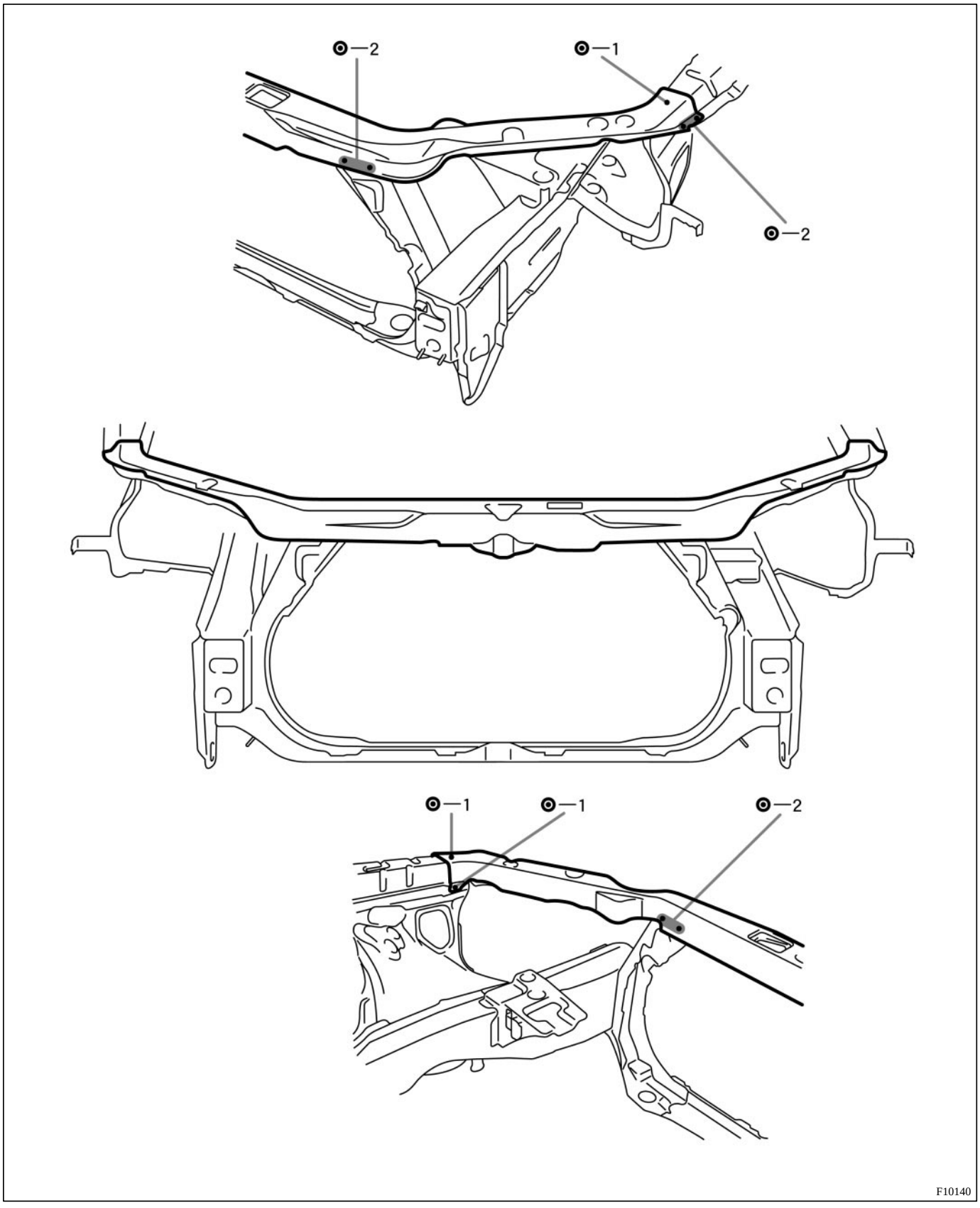

2. INSTALL RADIATOR UPPER SUPPORT

(a) Temporarily install the new parts and measure each part in accordance with the body dimension diagram.

HINT:
First install the hood lock spport.

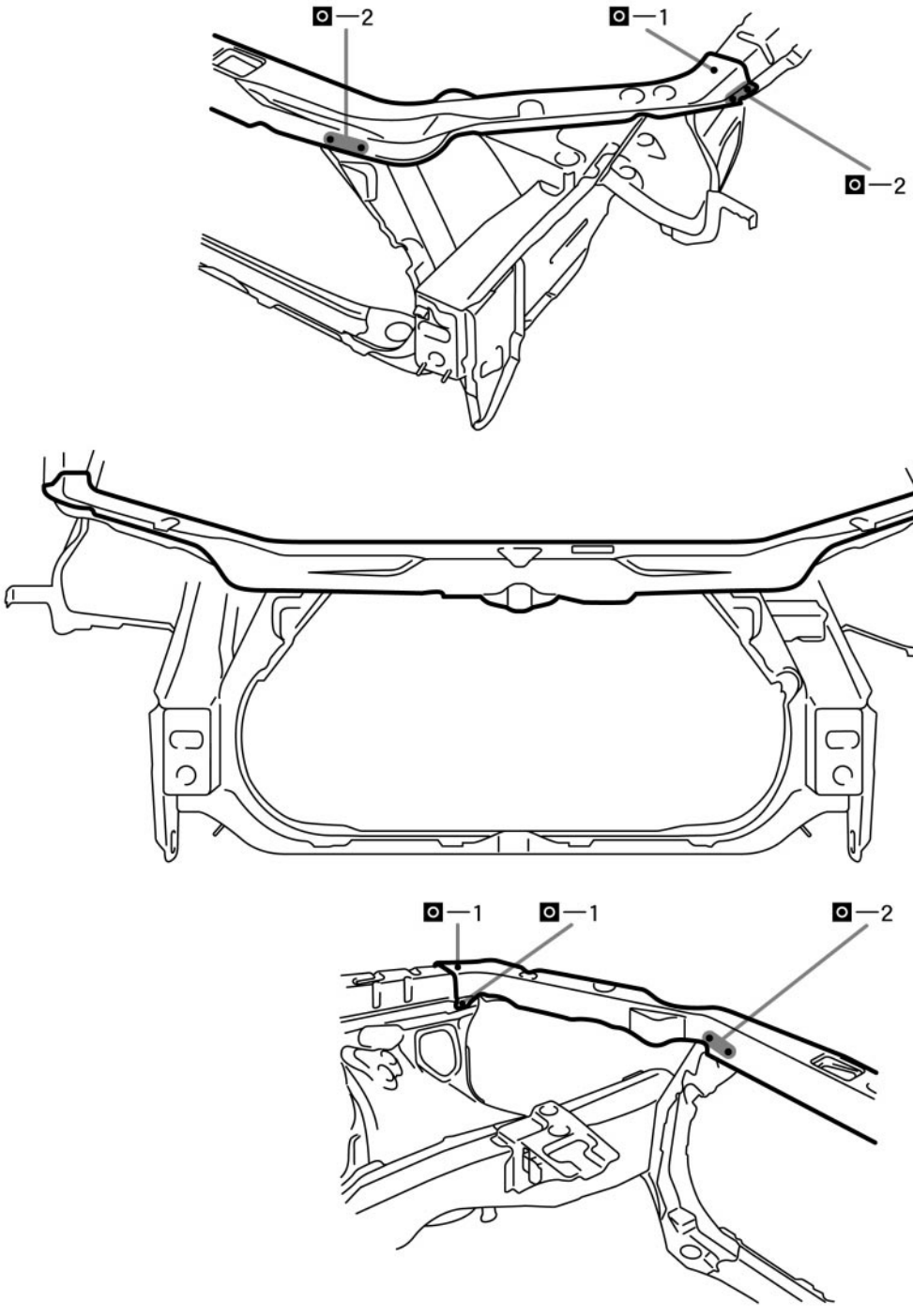

3. MEASURING THE ENGINE COMPARTMENT DIMENSIONS (See page BP-81)

4. APPLYING SEALER TO THE ENGINE COMPARTMENT (See page PC-1)

5. APPLYING ANTI-RUST AGENT

(a) After applying the top coat layer, apply the anti-rust agent to the inside of the necked section structural weld spots.

REAR DOOR OUTER PANEL (ASSY)

REPLACEMENT

1. REMOVE REAR DOOR OUTER PANEL

(a) Before removing the outer panel, make the installation position with a tape.

(b) After grinding off the hemming location, remove the outer panel.

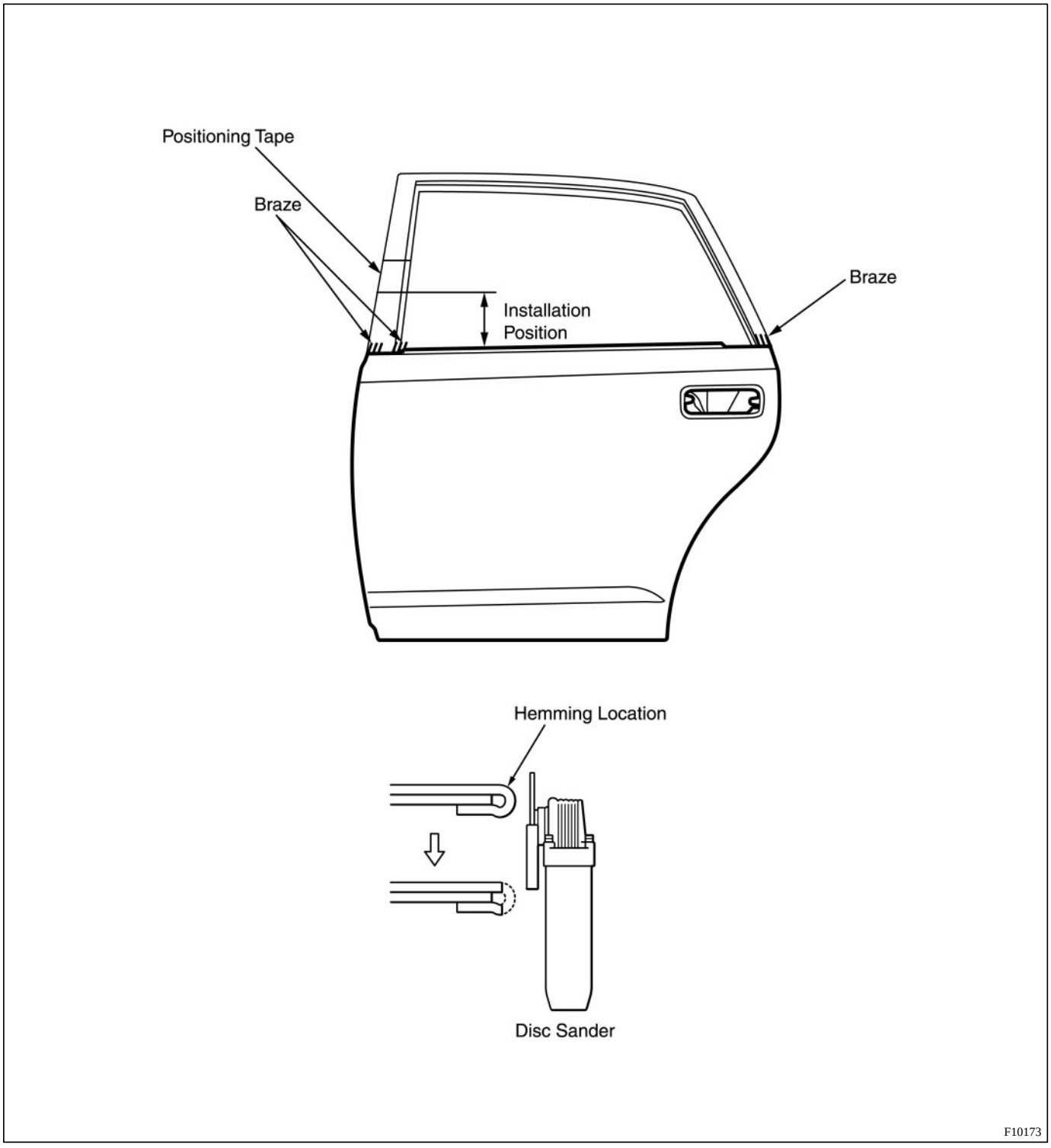

2. INSTALL FRONT DOOR OUTER PANEL

(a) Before temporarily installing the new parts, apply body sealer to the reinforcement, side impact protection beam and back side of the new parts.

HINT:

- Apply just enough sealer for the reinforcement and side impact beam to touch the new panel. Apply sealer evenly around the flange area, about 10 mm (0.39 in.) from the edge, as shown.
- For other sealing points, refer to section PC.

(b) Bend the flange hem about 30° with a hammer and dolly, then fasten tightly with a hemming tool.

HINT:

- Perform hemming in three steps, being careful not to warp the panel.
- If a hemming tool cannot be used, hem with a hammer and dolly.

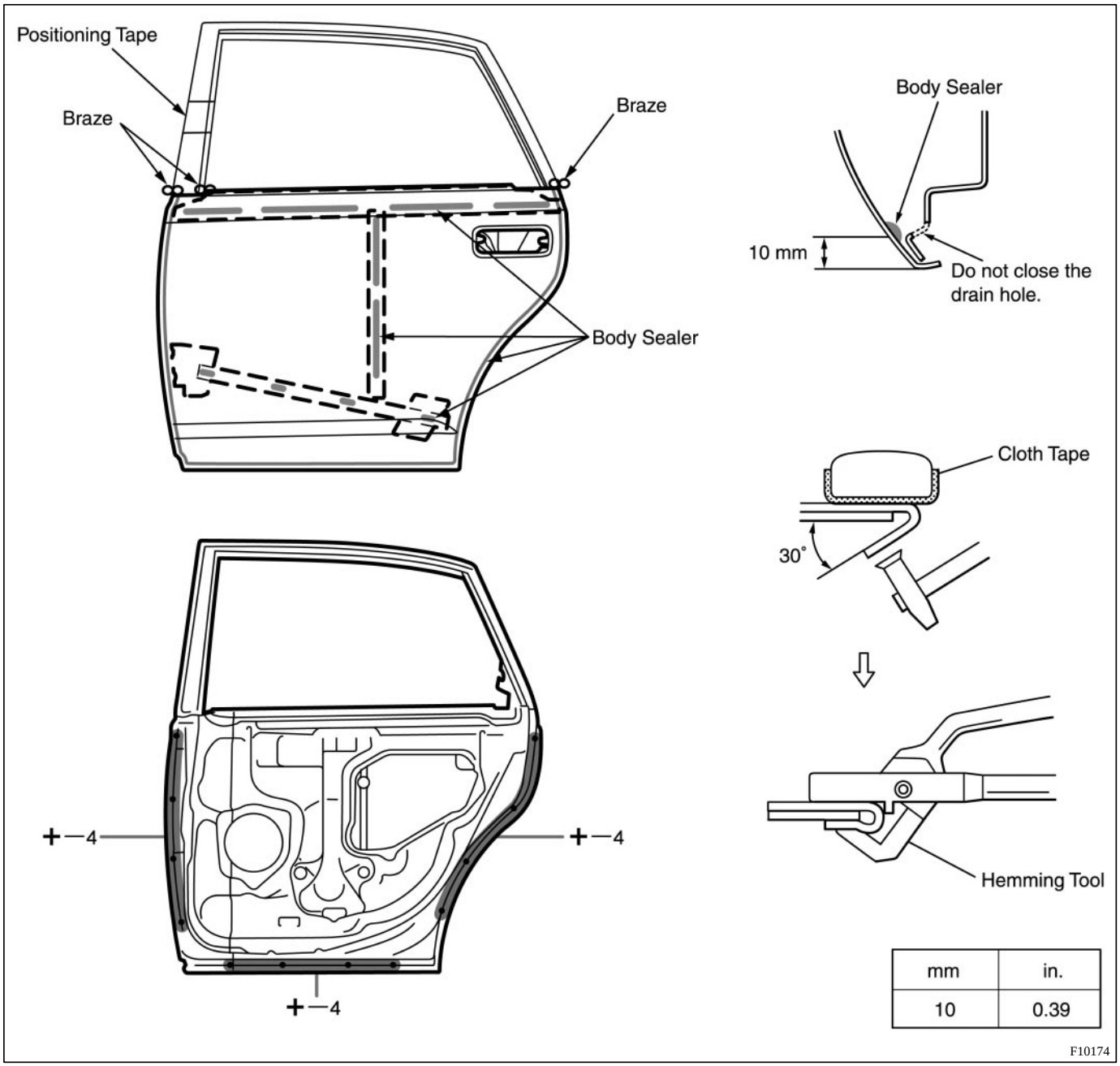

mm	in.
10	0.39

3. APPLYING SEALER TO THE DOOR PARTS (See page PC-1)

4. APPLYING ANTI-RUST AGENT

(a) After applying the top coat layer, apply the anti-rust agent to the inside of the necked section structural weld spots.

REAR FLOOR PAN (ASSY)

REPLACEMENT

1. **REMOVE BODY LOWER BACK PANEL (See page BP-58)**
2. **REMOVE REAR FLOOR NO.3 CROSSMEMBER (See page BP-62)**
3. **REMOVE REAR FLOOR PAN**

(a) After removing the rear floor pan reinforcement, remove the rear floor pan.

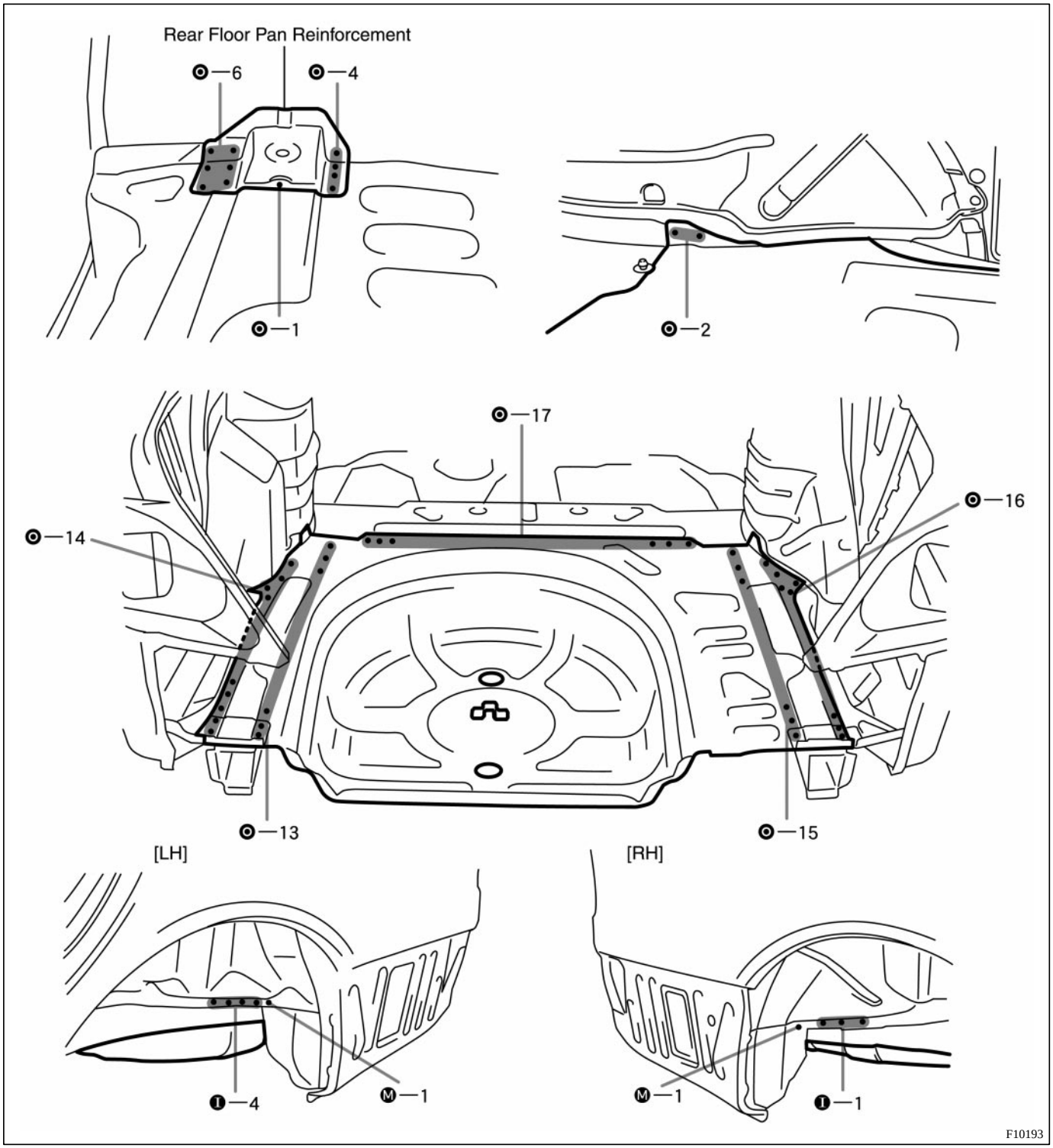

4. INSTALL REAR FLOOR PAN

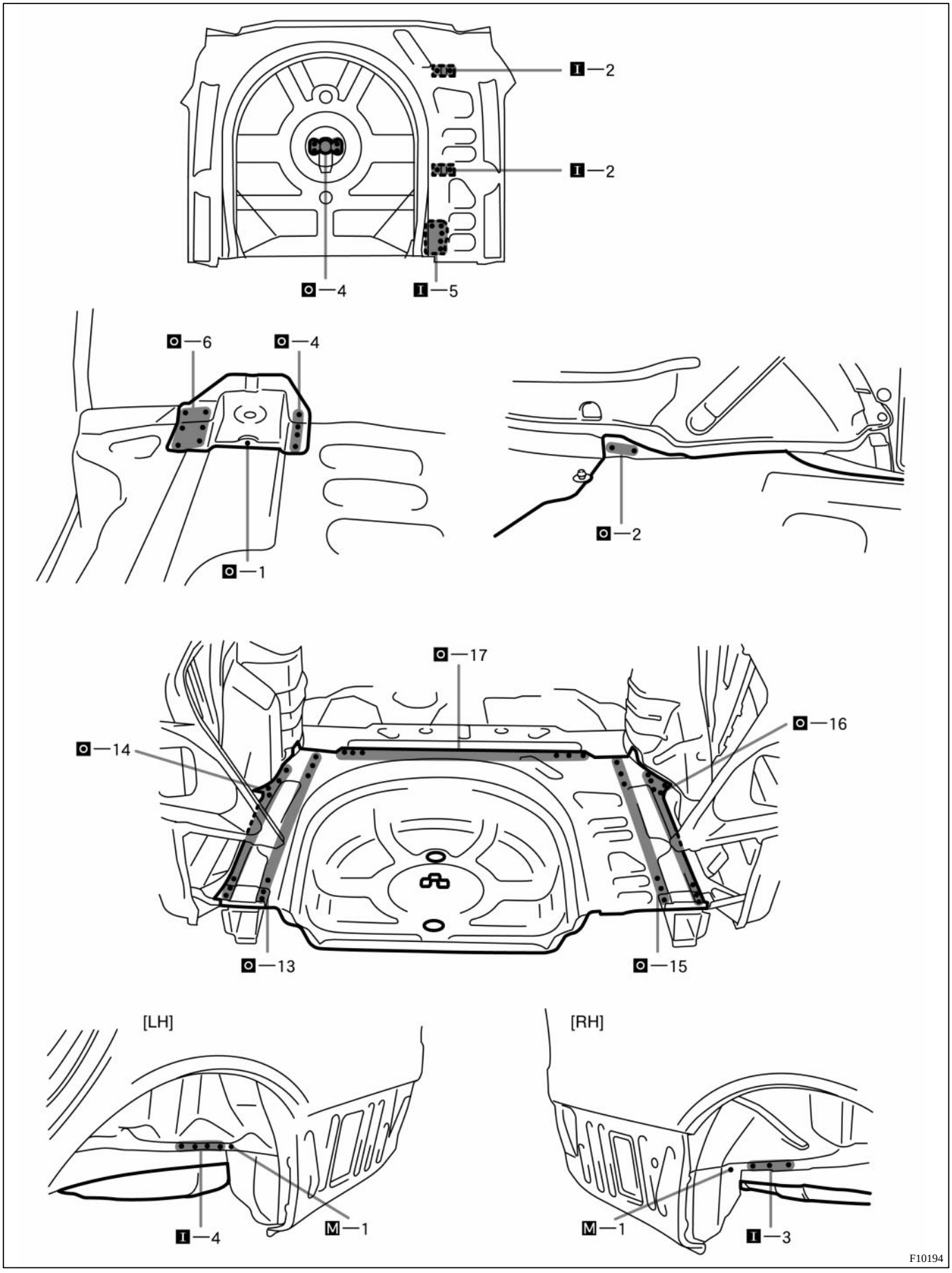

5. **INSTALL REAR FLOOR NO.3 CROSSMEMBER (See page BP-62)**
6. **INSTALL BODY LOWER BACK PANEL (See page BP-58)**
7. **APPLYING SEALER TO THE INSIDE OF THE VEHICLE (See page PC-1)**
8. **APPLYING SEALER TO THE REAR LUGGAGE COMPARTMENT (See page PC-1)**
9. **APPLYING UNDER COATING (See page PC-6)**
10. **APPLYING ANTI-RUST AGENT**

(a) After applying the top coat layer, apply the anti-rust agent to the inside of the necked section structural weld spots.

11. **INSTALL REAR FLOOR SILENCER SHEET (See page PC-9)**
12. **INSTALL REAR FLOOR SILENCER NO.2 SHEET (See page PC-9)**

REAR FLOOR SIDE PANEL (ASSY): Right Side

REPLACEMENT

1. REMOVE BODY LOWER BACK PANEL (See page BP-58)
2. REMOVE REAR FLOOR NO.3 CROSSMEMBER (See page BP-62)
3. REMOVE REAR FLOOR PAN (See page BP-64)
4. REMOVE REAR FLOOR SIDE PANEL

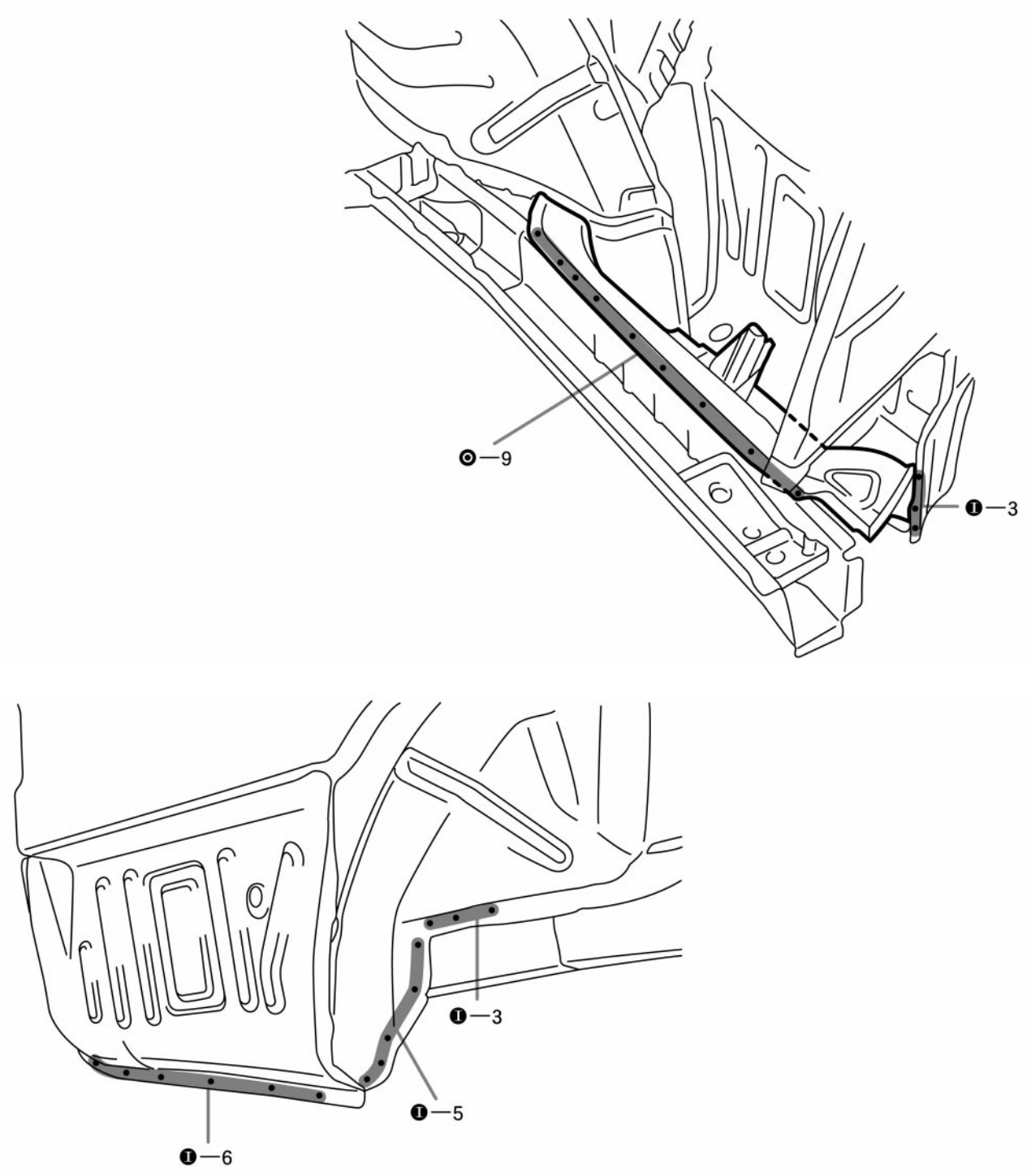

3. INSTALL REAR FLOOR SIDE PANEL

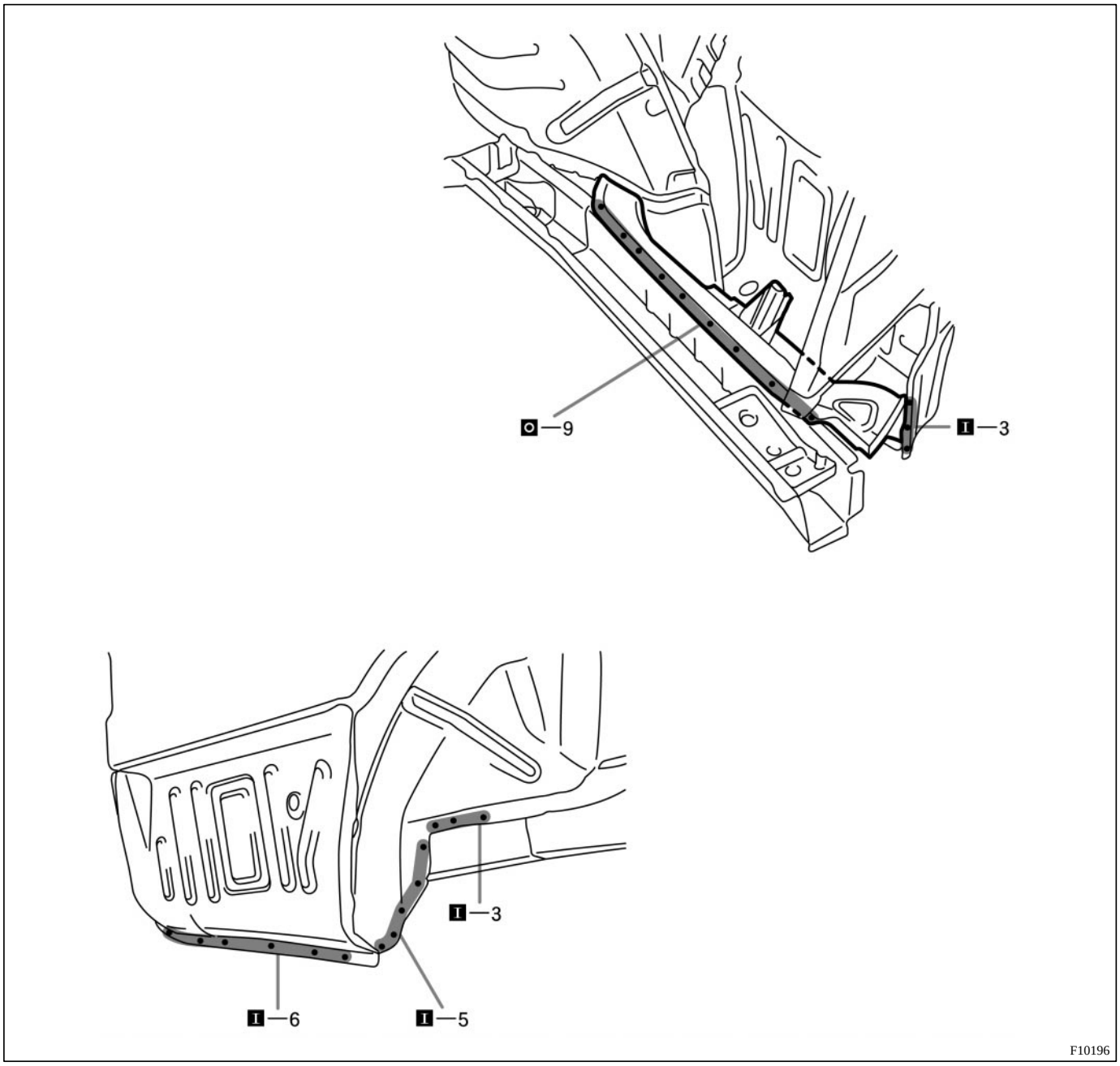

4. INSTALL REAR FLOOR PAN (See page BP-64)

5. INSTALL REAR FLOOR NO.3 CROSSMEMBER (See page BP-62)

6. INSTALL BODY LOWER BACK PANEL (See page BP-58)

7. APPLYING SEALER TO THE REAR LUGGAGE COMPARTMENT (See page PC-1)

8. APPLYING UNDER COATING (See page PC-6)

9. APPLYING ANTI-RUST AGENT

(a) After applying the top coat layer, apply the anti-rust agent to the inside of the necked section structural weld spots.

10. INSTALL REAR FLOOR SILENCER SHEET (See page PC-9)

11. INSTALL REAR FLOOR SILENCER NO.2 SHEET (See page PC-9)

REAR FLOOR SIDE PANEL (ASSY): Left Side

REPLACEMENT

1. REMOVE BODY LOWER BACK PANEL (See page BP-58)
2. REMOVE REAR FLOOR NO.3 CROSSMEMBER (See page BP-62)
3. REMOVE REAR FLOOR PAN (See page BP-64)
4. REMOVE REAR FLOOR SIDE PANEL

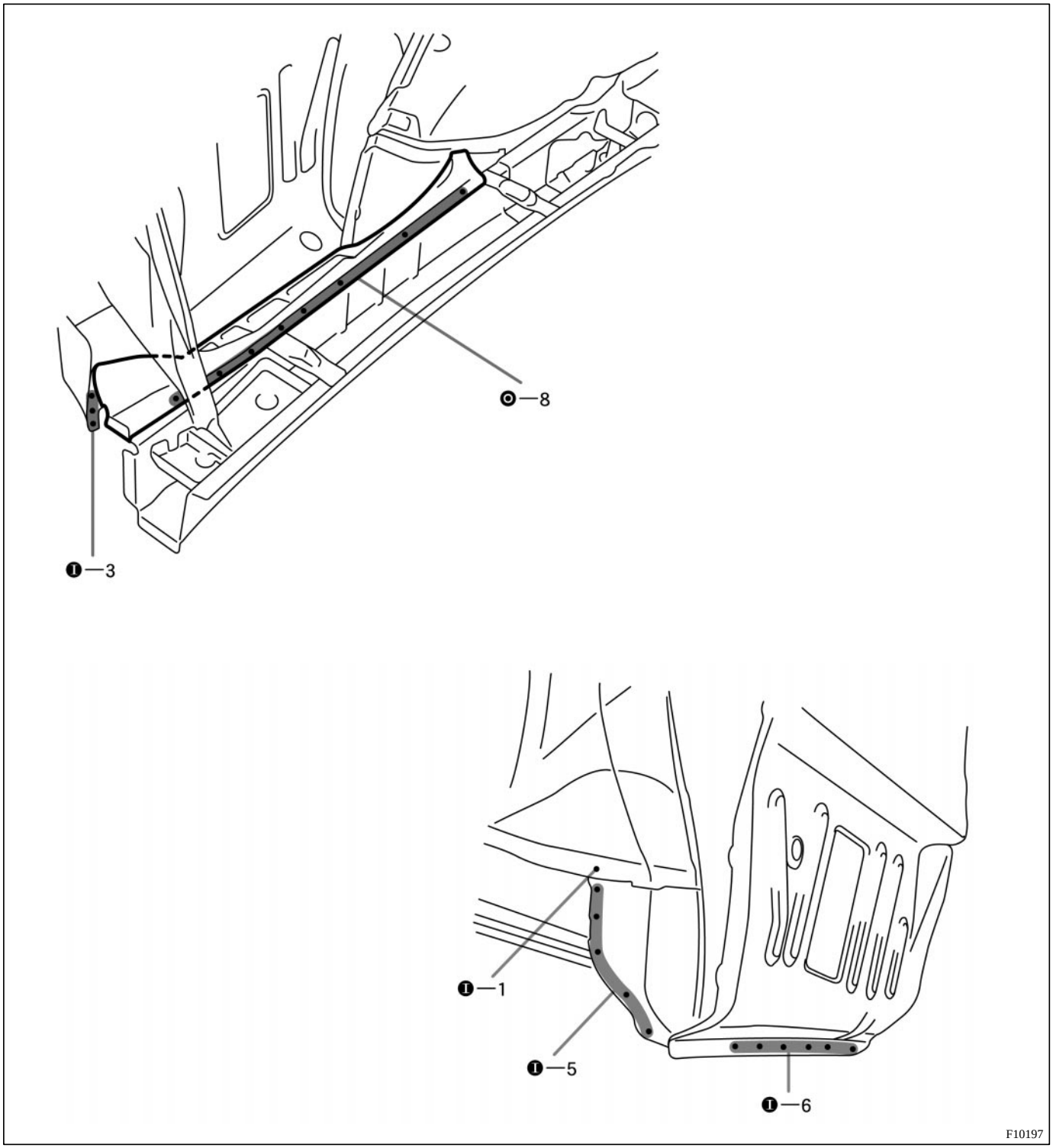

3. INSTALL REAR FLOOR SIDE PANEL

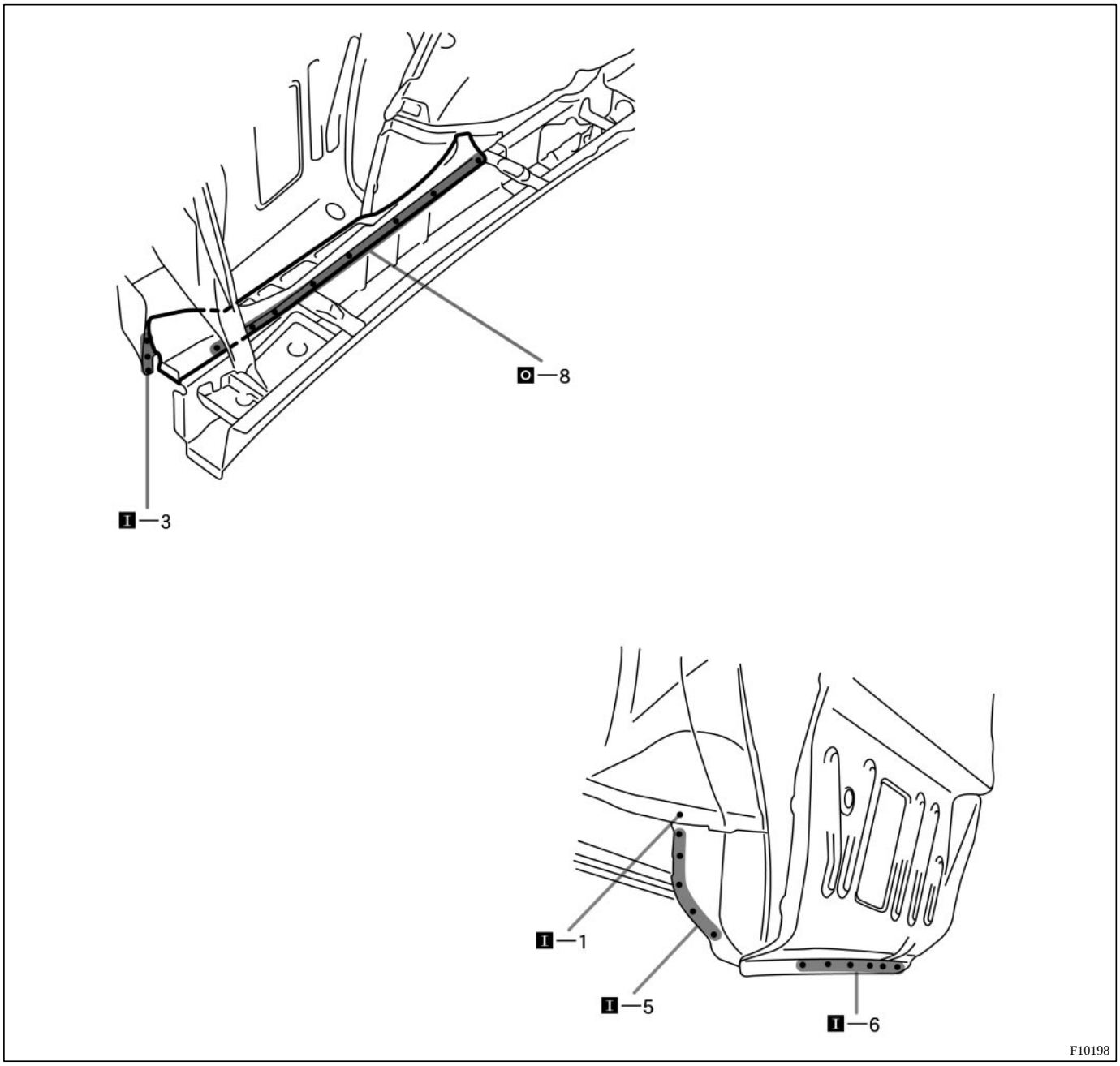

4. INSTALL REAR FLOOR PAN (See page BP-64)

5. INSTALL REAR FLOOR NO.3 CROSSMEMBER (See page BP-62)

6. INSTALL BODY LOWER BACK PANEL (See page BP-58)

7. APPLYING SEALER TO THE REAR LUGGAGE COMPARTMENT (See page PC-1)

8. APPLYING UNDER COATING (See page PC-6)

9. APPLYING ANTI-RUST AGENT

(a) After applying the top coat layer, apply the anti-rust agent to the inside of the necked section structural weld spots.

10. INSTALL REAR FLOOR SILENCER SHEET (See page PC-9)

11. INSTALL REAR FLOOR SILENCER NO.2 SHEET (See page PC-9)

REAR FLOOR SIDE REAR MEMBER (ASSY)

REPLACEMENT

1. REMOVE BODY LOWER BACK PANEL (See page BP-58)
2. REMOVE REAR FLOOR NO.3 CROSSMEMBER (See page BP-62)
3. REMOVE REAR FLOOR SIDE REAR MEMBER

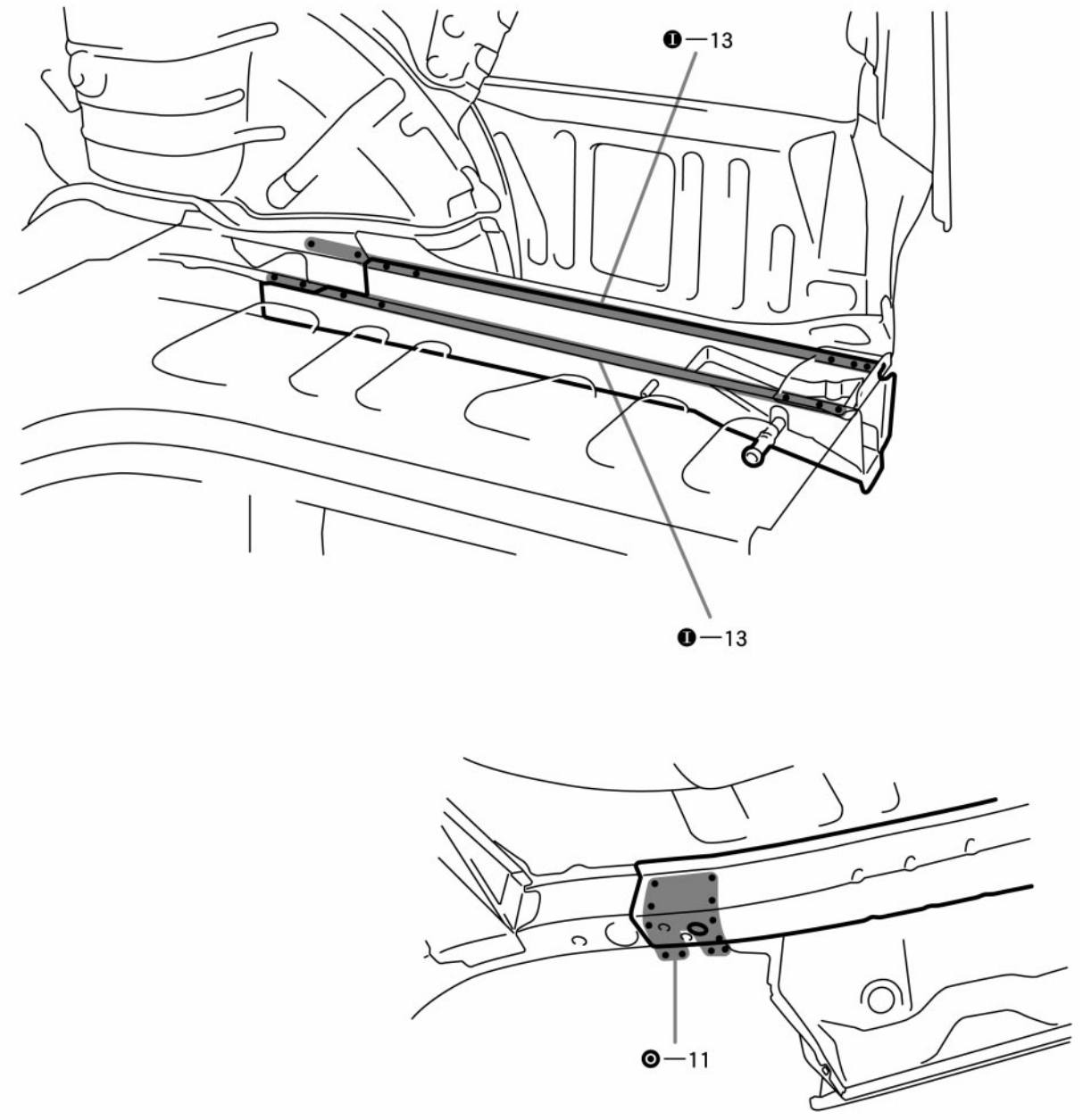

F10199

4. INSTALL REAR FLOOR SIDE REAR MEMBER

(a) When temporarily installing the new parts, determine the installation position by the assembly mark. Then, measure each part in accordance with the body dimension diagram.

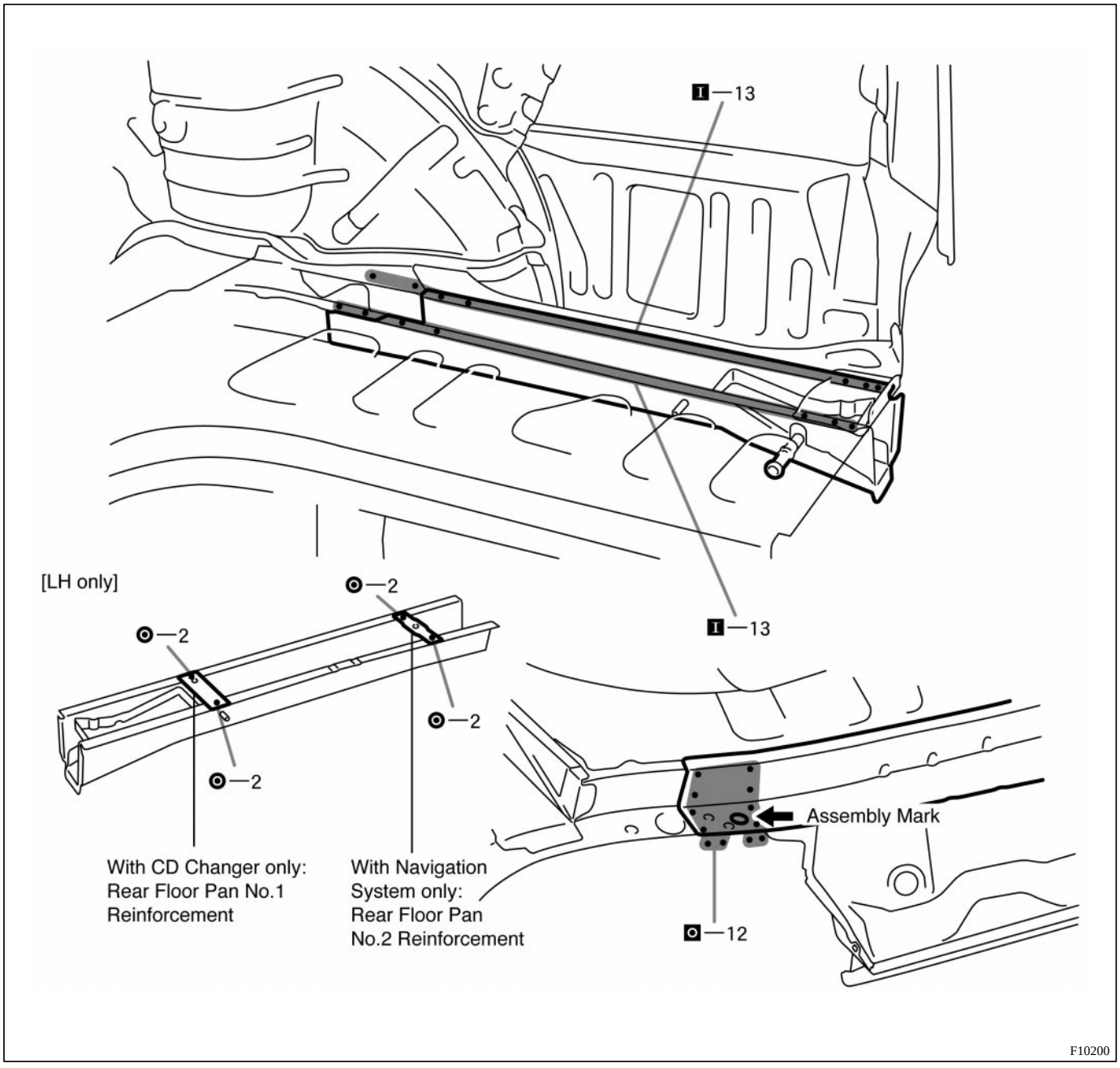

5. MEASURING THE UNDER BODY DIMENSIONS (See page BP-85)

6. INSTALL REAR FLOOR NO.3 CROSSMEMBER (See page BP-62)

7. INSTALL BODY LOWER BACK PANEL (See page BP-58)

8. APPLYING SEALER TO THE INSIDE OF THE VEHICLE (See page PC-1)

9. APPLYING SEALER TO THE REAR LUGGAGE COMPARTMENT (See page PC-1)

10. APPLYING UNDER COATING (See page PC-6)

11. APPLYING AUTI-RUST AGENT

(a) After applying the top coat layer, apply the anti-rust agent to the inside of the necked section structural weld spots.

12. INSTALL REAR FLOOR SILENCER SHEET (See page PC-9)

REAR FLOOR NO.2 CROSSMEMBER (ASSY)

REPLACEMENT

1. REMOVE REAR FLOOR NO.2 CROSSMEMBER

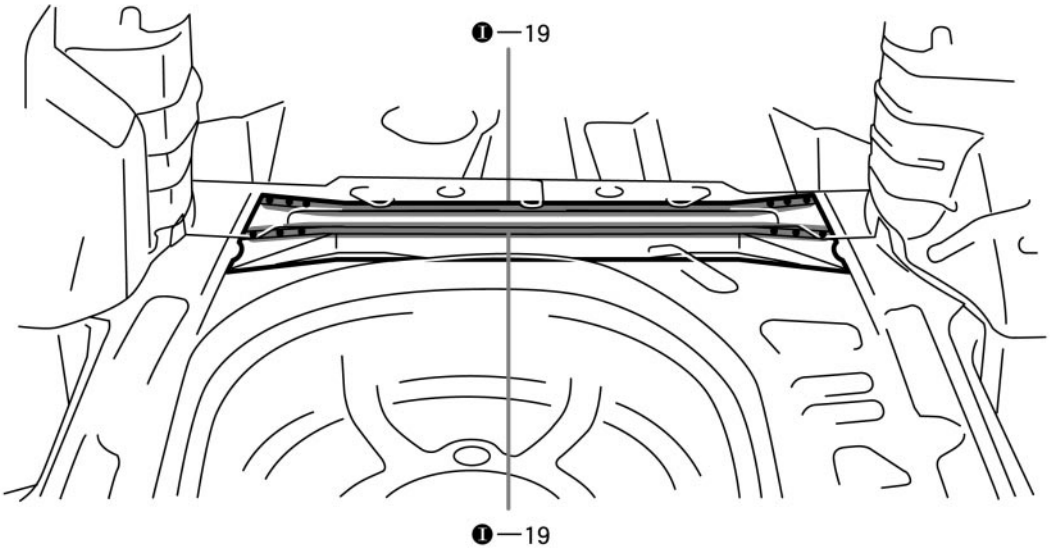

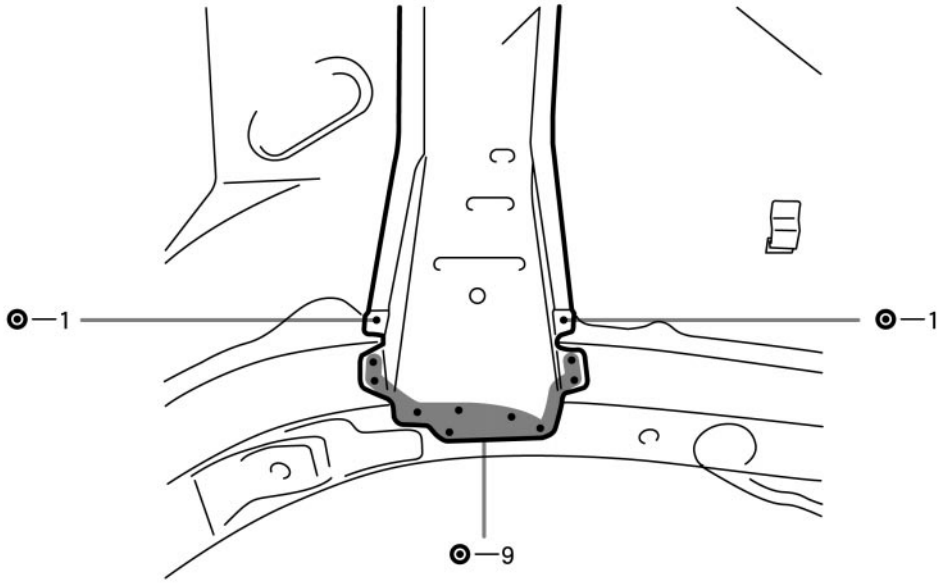

F10201

2. INSTALL REAR FLOOR NO.2 CROSSMEMBER

(a) Temprarily install the new parts and measure each part in accordance with the body dimension diagram.

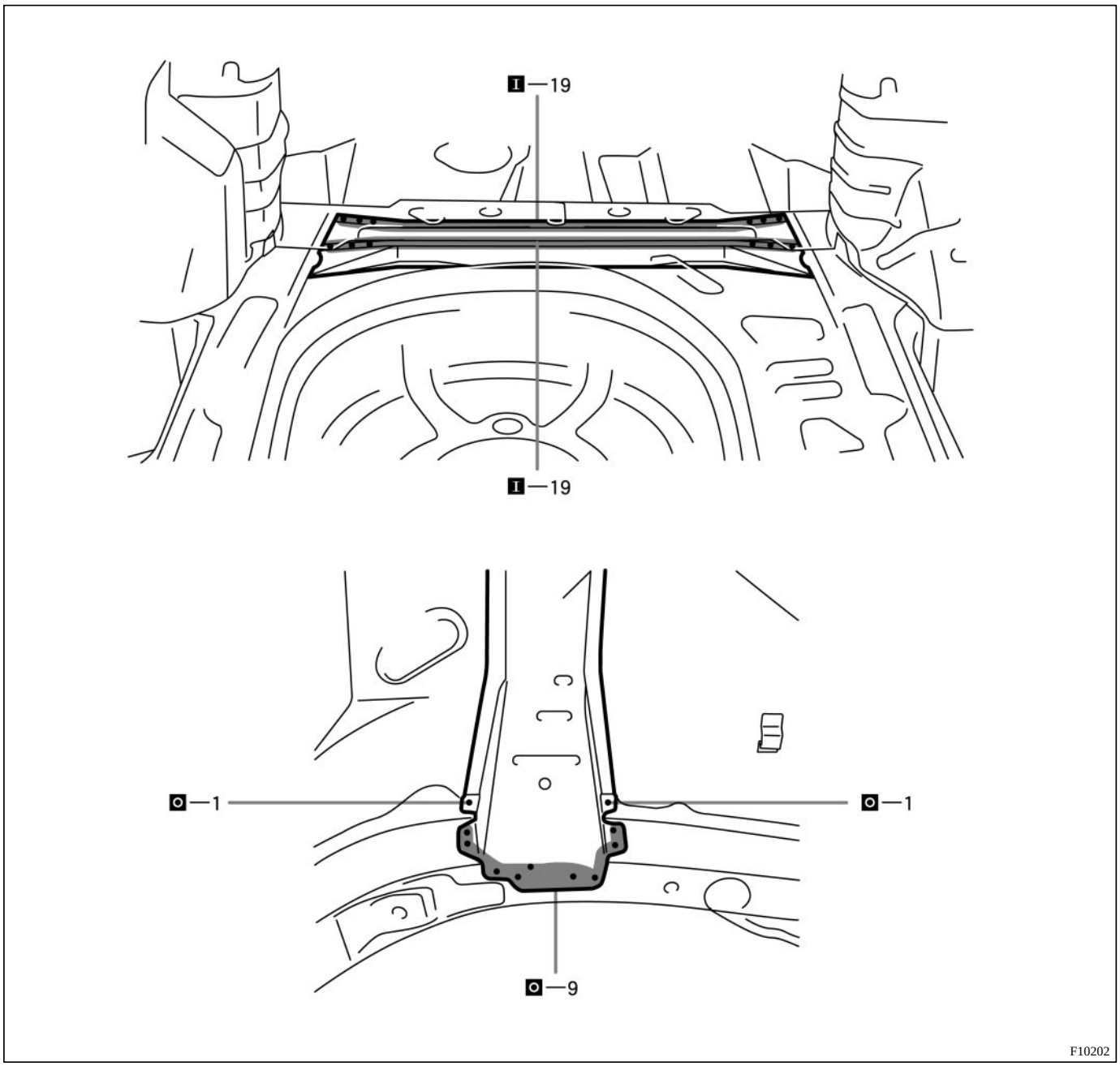

3. MEASURING THE UNDER BODY DIMENSIONS (See page BP-85)

4. APPLYING SEALER TO THE INSIDE OF THE VEHICLE (See page PC-1)

5. APPLYING UNDER COATING (See page PC-6)

6. APPLYING ANTI-RUST AGENT

(a) After applying the top coat layer, apply the anti-rust agent to the inside of the necked section structoral weld spots.

7. INSTALL CENTER FLOOR SILENCER SHEET (See page PC-9)

8. INSTALL REAR FLOOR SILENCER SHEET (See page PC-9)

REAR FLOOR NO.3 CROSSMEMBER (ASSY)

REPLACEMENT

1. REMOVE BODY LOWER BACK PANEL (See page BP-58)
2. REMOVE REAR FLOOR NO.3 CROSSMEMBER

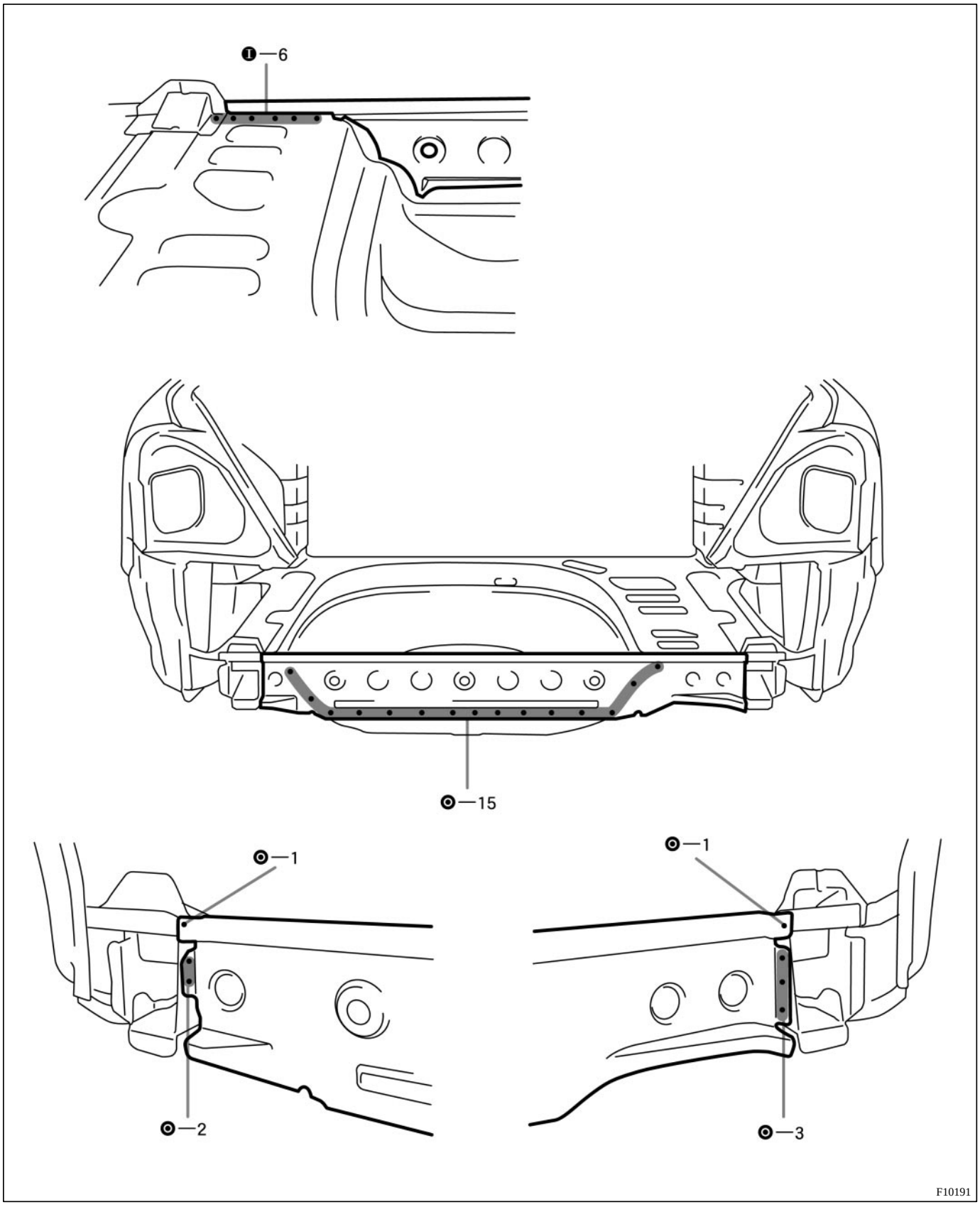

3. INSTALL REAR FLOOR NO.3 CROSSMEMBER

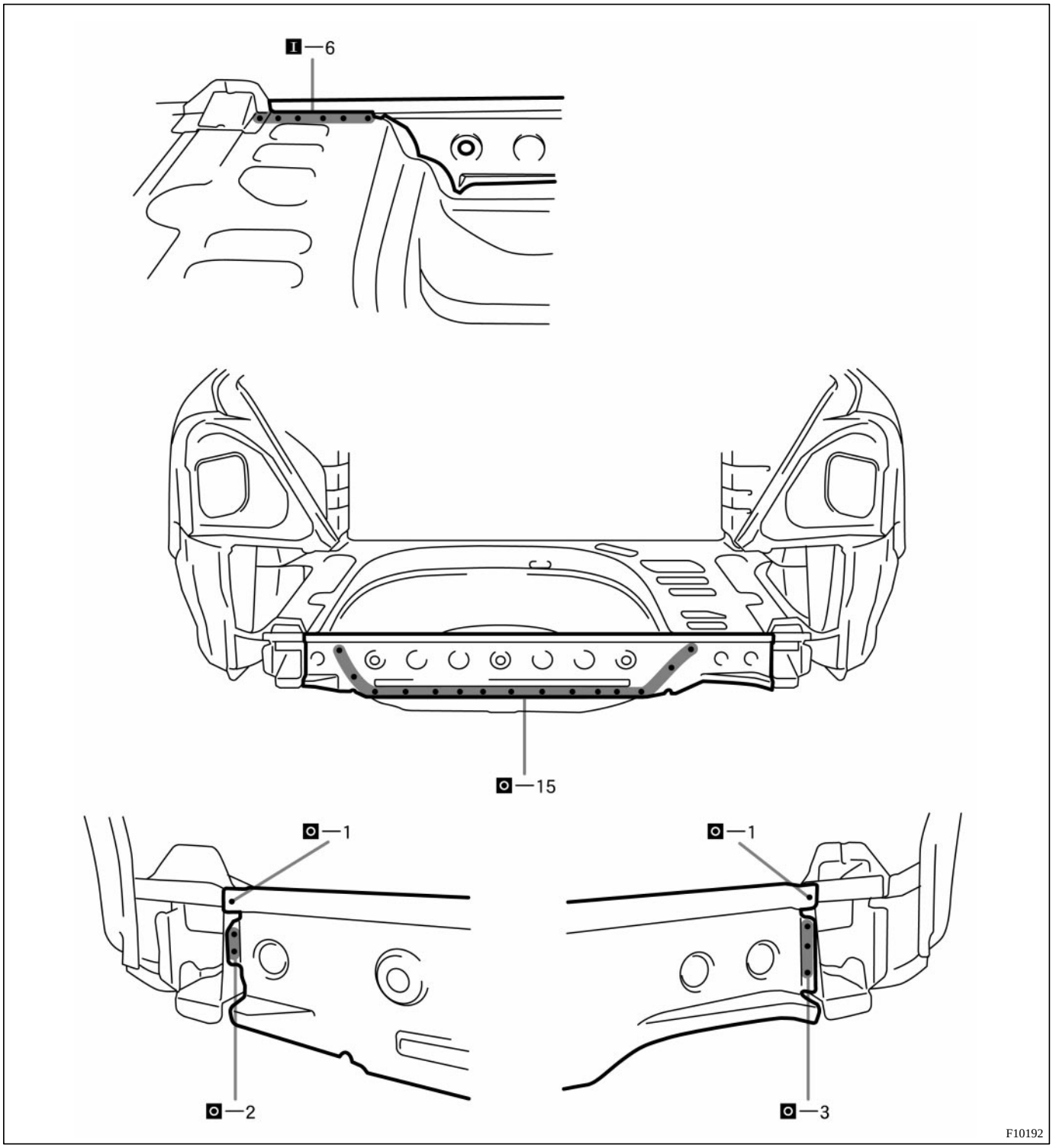

4. INSTALL BODY LOWER BACK PANEL (See page BP-58)

5. APPLYING SEALER TO THE REAR LUGGAGE COMPARTMENT (See page PC-1)

6. APPLYING UNDER COATING (See page PC-6)

7. APPLYING ANTI-RUST AGENT

(a) After applying the top coat layer, apply the anti-rust agent to the inside of the necked section structural weld spots.

ROCKER OUTER EXTENSION (CUT)

REPLACEMENT

1. REMOVE QUARTER PANEL (See page BP-49)

2. REMOVE ROCKER OUTER EXTENSION

(a) Cut and join the parts at the location as shown below.

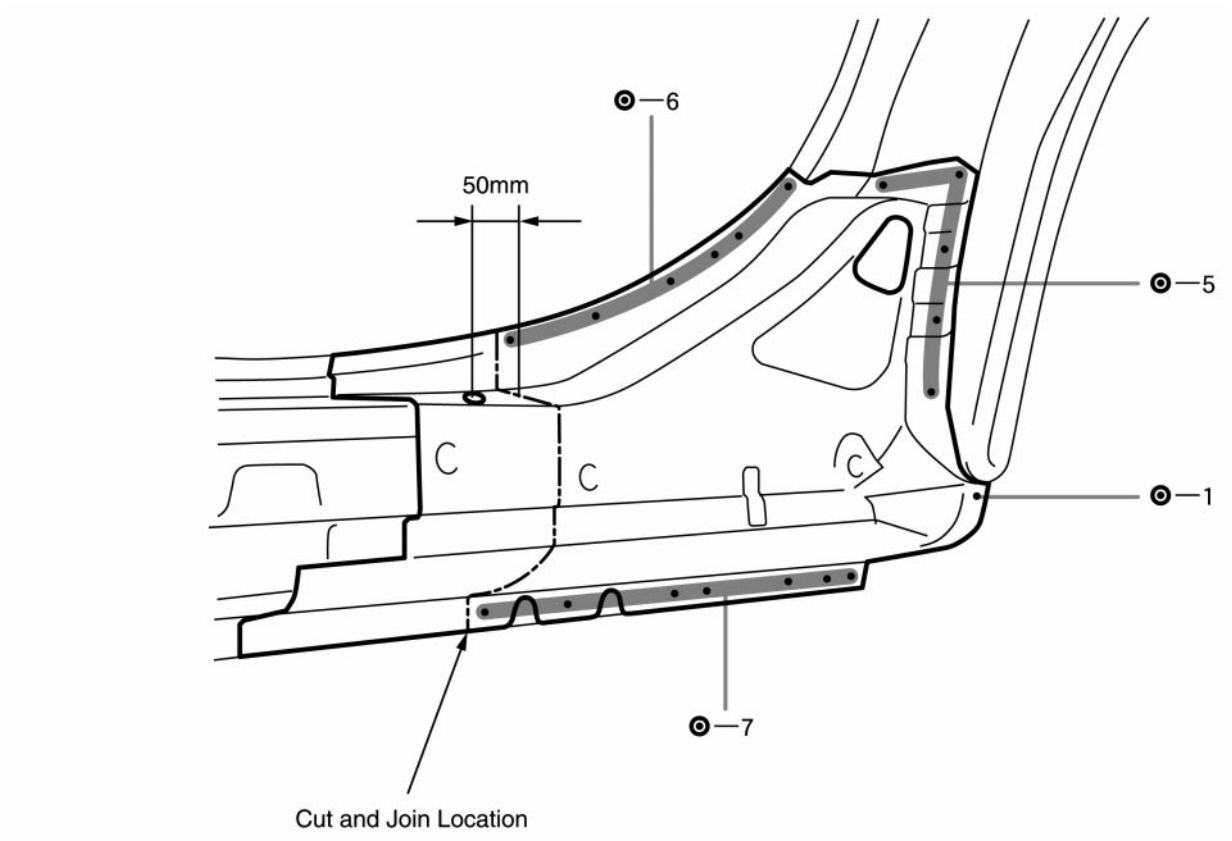

mm	in.
50	1.97

F10179

3. INSTALL ROCKER OUTER EXTENSION

HINT:
Temporarily install the quarter panel and inspect the fitting before welding, since this affects the appearance of the finish.

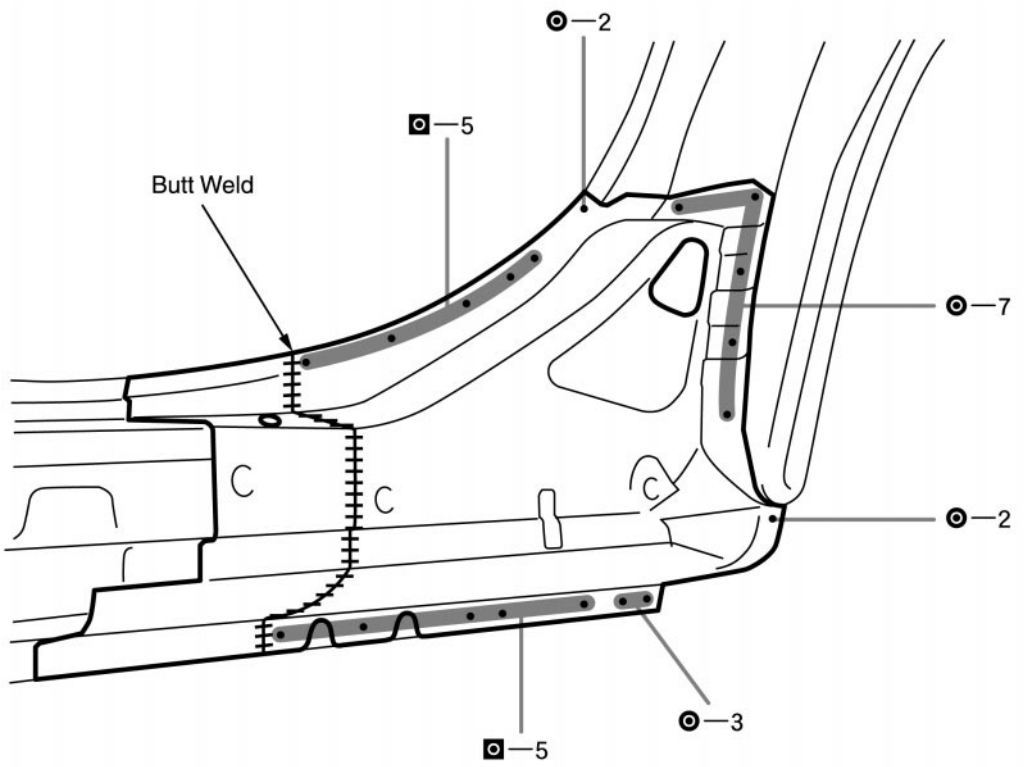

F10180

4. INSTALL QUARTER PANEL (See page BP-49)

5. APPLYING SEALER TO THE INSIDE OF THE VEHICLE (See page PC-1)

6. APPLYING SEALER TO THE REAR LUGGAGE COMPARTMENT (See page PC-1)

7. APPLYING UNDER COATING (See page PC-6)

8. CHARGING THE POLYURETHANE FOAM (See page PC-8)

9. APPLYING ANTI-RUST AGENT

(a) After applying the top coat layer, apply the anti-rust agent to the inside of the necked section structural weld spots.

ROCKER OUTER PANEL (CUT)

REPLACEMENT

1. REMOVE ROCKER OUTER PANEL

(a) Cut and join the parts at the locations as shown below.

HINT:
Take care not to damage the internal reinforcement.

(b) After removing the center body outer pillar, remove the center body pillar lower reinforcement.

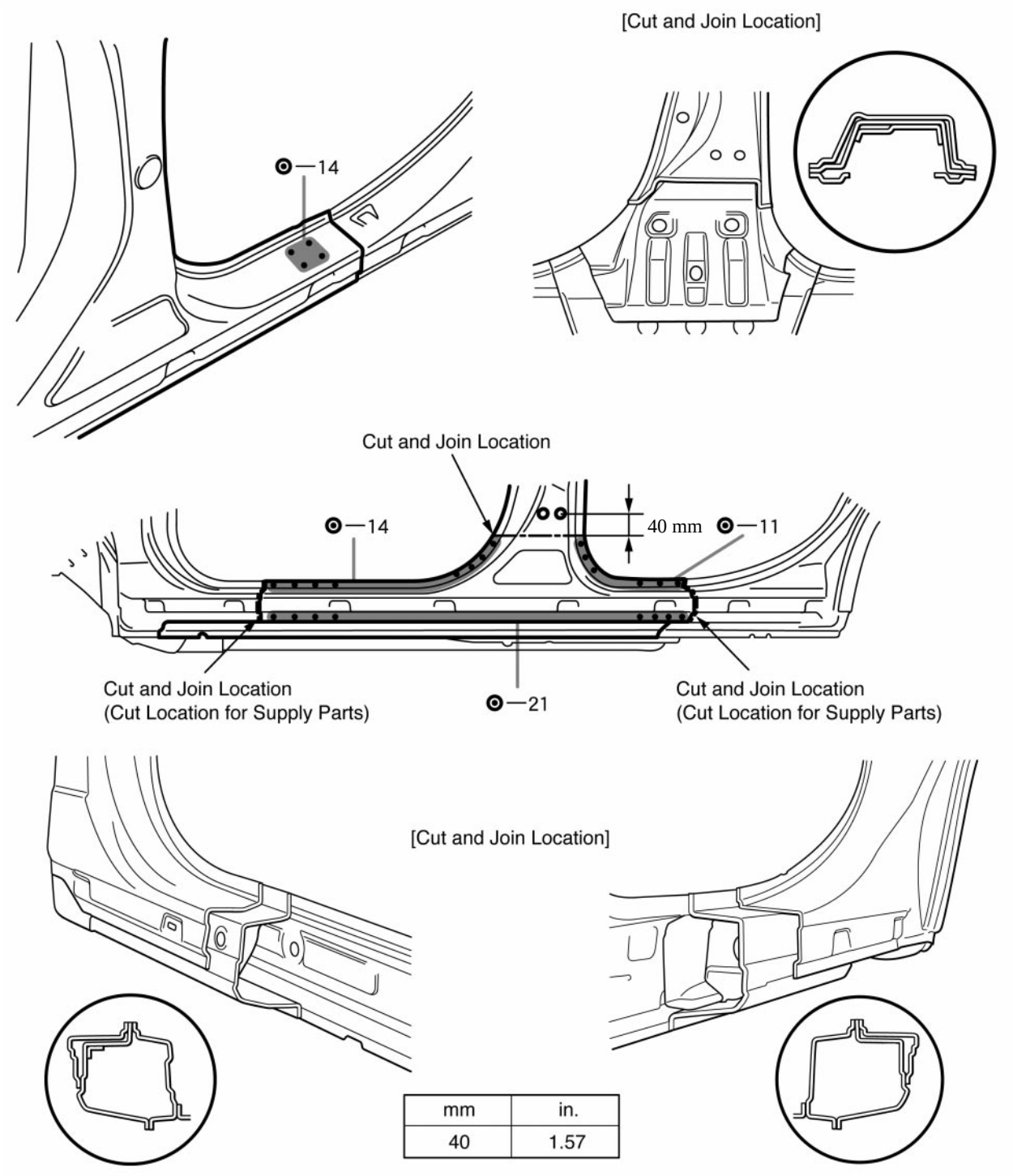

mm	in.
40	1.57

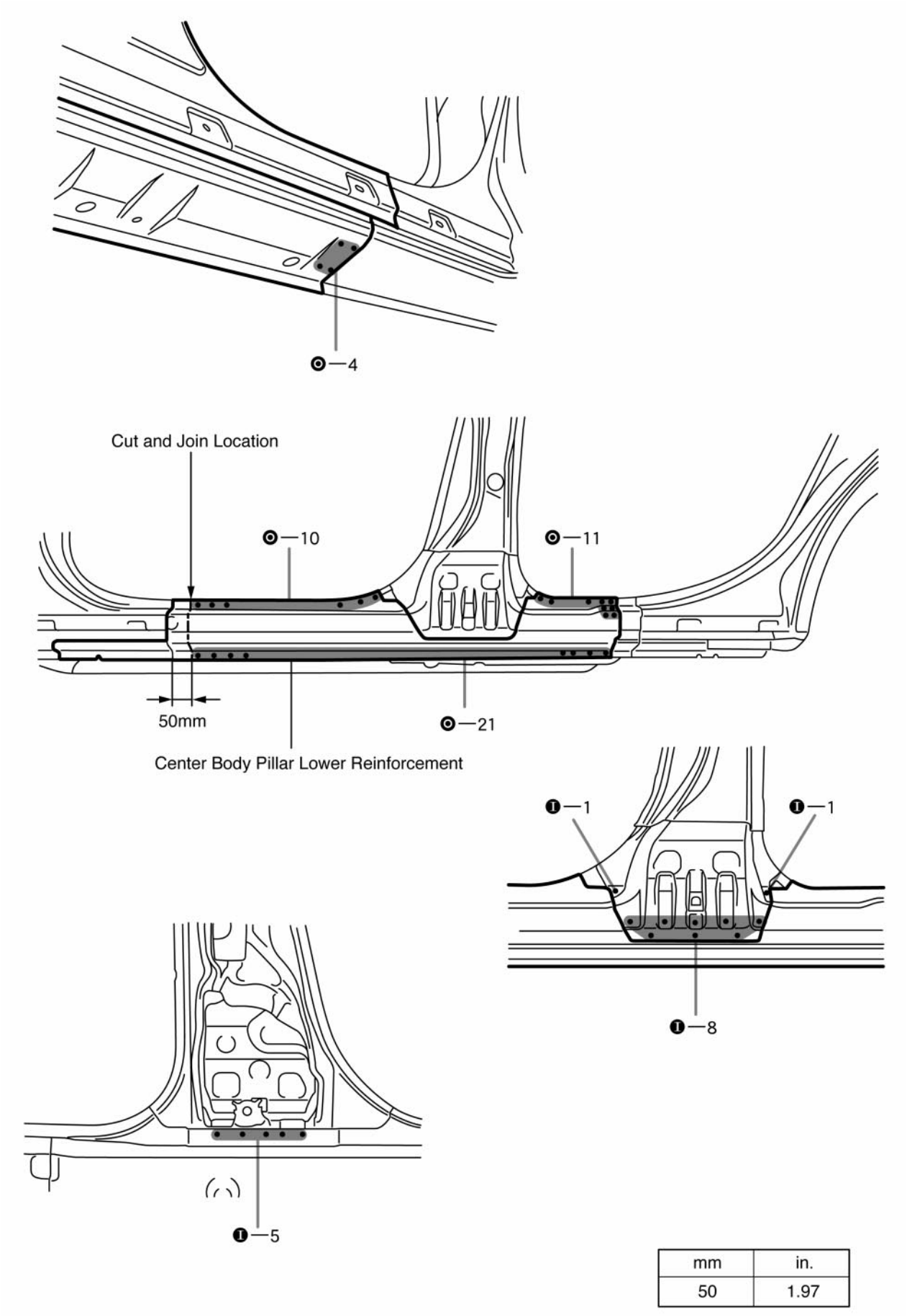

mm	in.
50	1.97

F10176

2. INSTALL ROCKER OUTER PANEL

HINT:
Inspect the fitting of the front door and rear door, etc., before welding, since this affects the appearance of the finish.

(a) After installing the center body pillar lower reinforcement, install the center body outer pillar.

(b) Temporarily install the new parts and measure each part in accordance with the body dimension diagram.

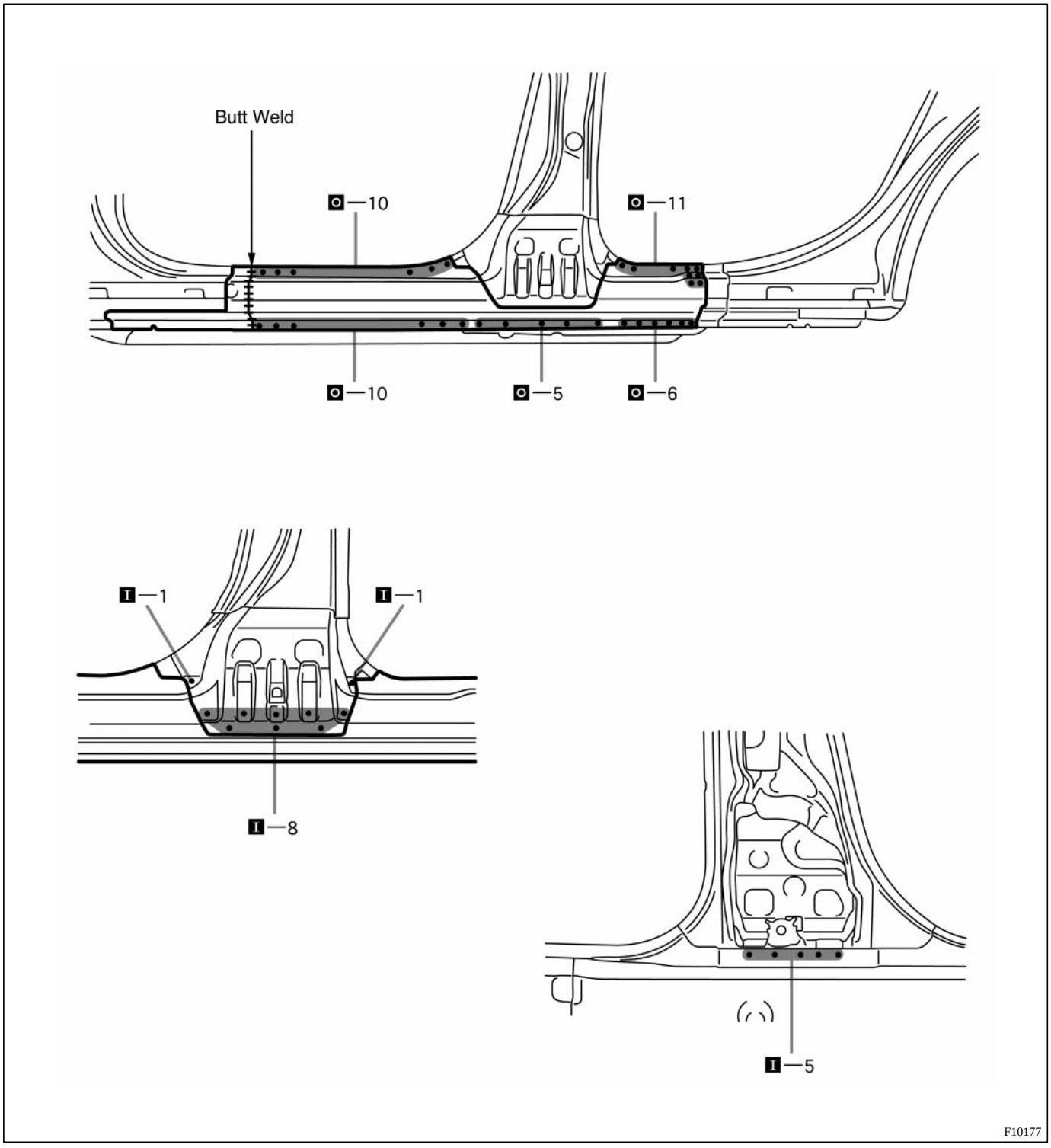

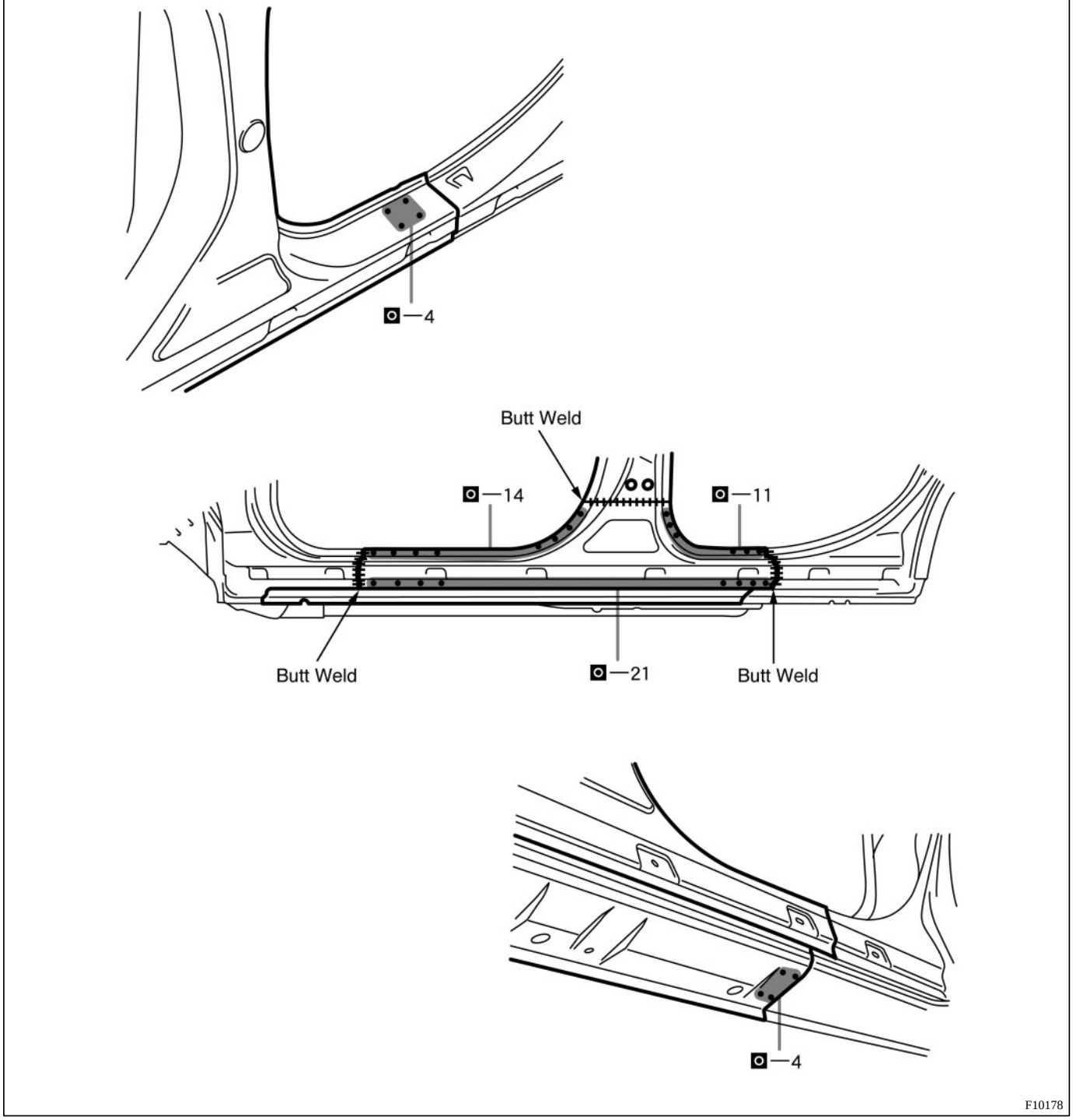

3. MEASURING THE OPENING PORTION DIMENSIONS (See page BP-84)

4. APPLYING SEALER TO THE INSIDE OF THE VEHICLE (See page PC-1)

5. APPLYING ANTI-RUST AGENT

(a) After applying the top coat layer, apply the anti-rust agent to the inside of the necked section structural weld spots.

ROOF PANEL (ASSY): w/ Moon Roof

REPLACEMENT

1. REMOVE ROOF PANEL

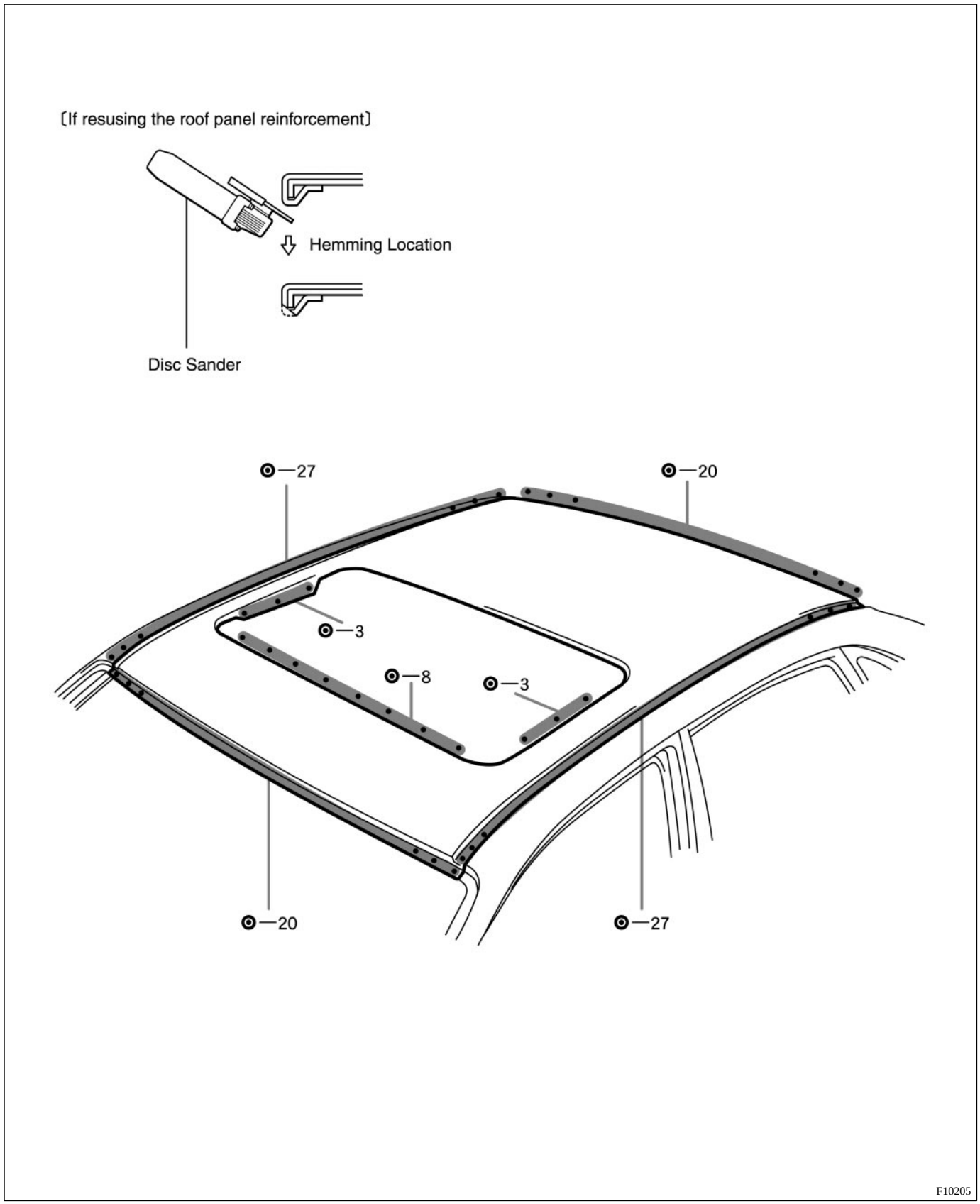

2. INSTALL ROOF PANEL

(a) Before temporarily installing the new parts, apply body sealer to the windshield header panel, roof panel reinforcement and back window frame.

HINT:
- Apply just enough sealer for the new parts to make contact.
- For other sealing points, refer to section PC.

(b) Bend the flange hem with a wooden hammer and dolly.

HINT:
Perform hemming three steps, being careful not to warp the panel.

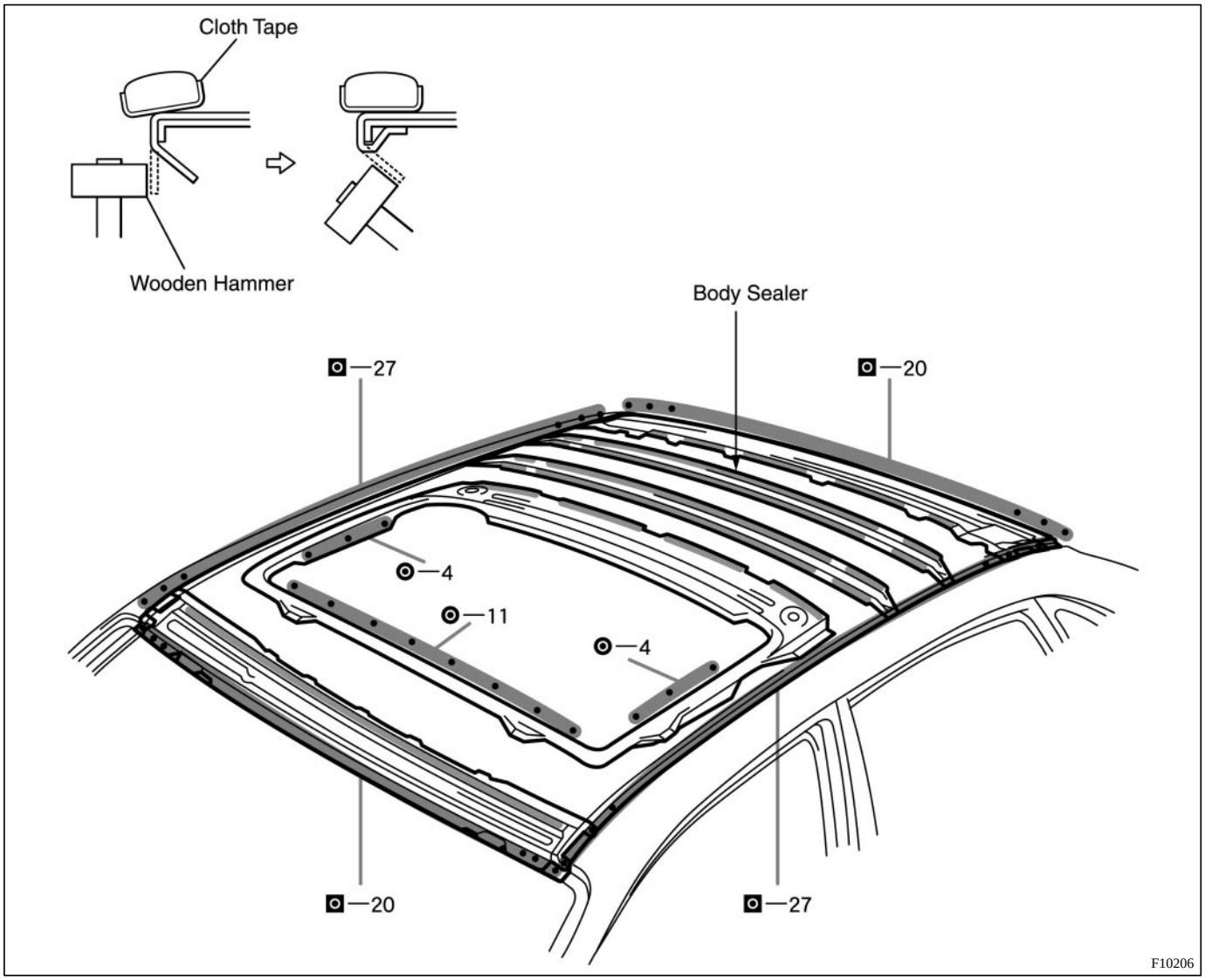

3. APPLYING SEALER TO THE INSIDE OF THE VEHICLE (See page PC-1)

4. APPLYING SEALER TO THE REAR LUGGAGE COMPARTMENT (See page PC-1)

5. CHARGING THE POLYURETHANE FOAM (See page PC-8)

6. APPLYING ANTI-RUST AGENT

(a) After applying the top coat layer, apply the anti-rust agent to the inside of the necked section structural weld spots.

ROOF PANEL (ASSY): w/o Moon Roof

REPLACEMENT

1. REMOVE ROOF PANEL

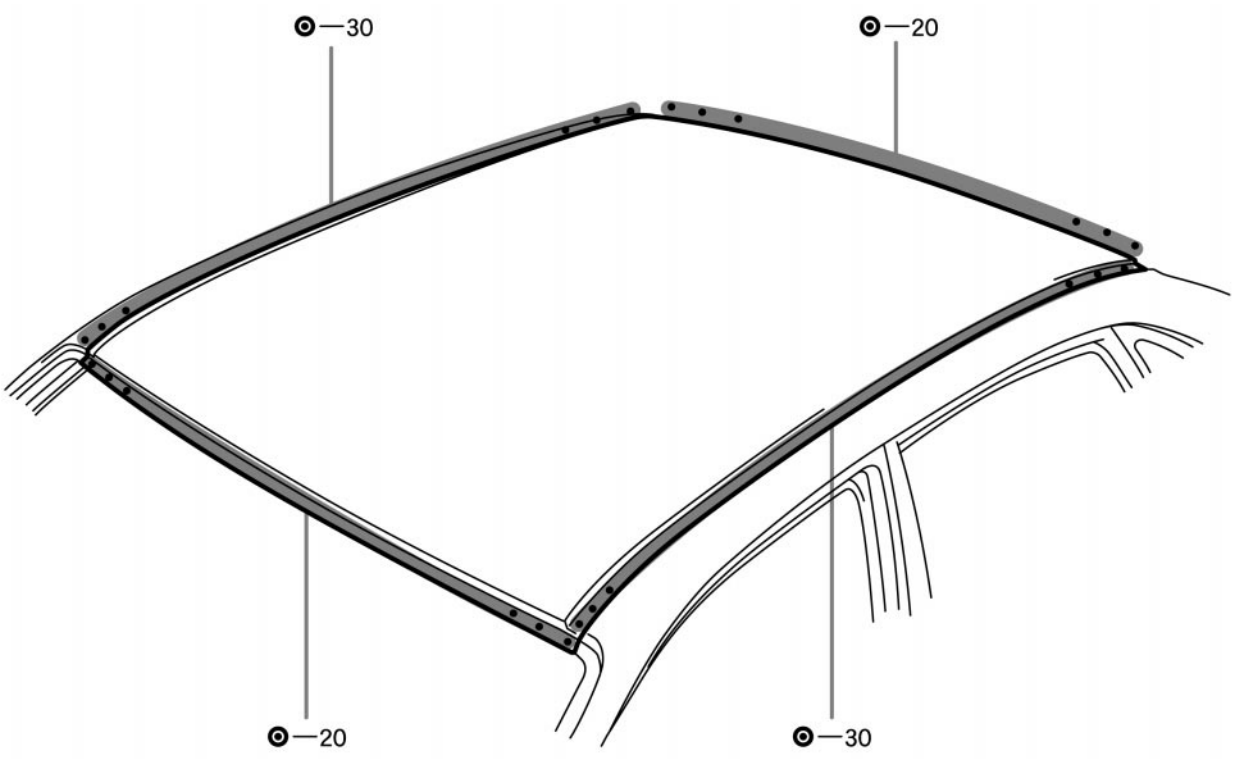

F10203

2. INSTALL ROOF PANEL

(a) Before temporarily installing the new parts, apply body sealer to the windshield header panel, roof panel reinforcement and back window frame.

HINT:

- Apply just enough sealer for the new parts to make contact.
- For other sealing points, refer to section PC.

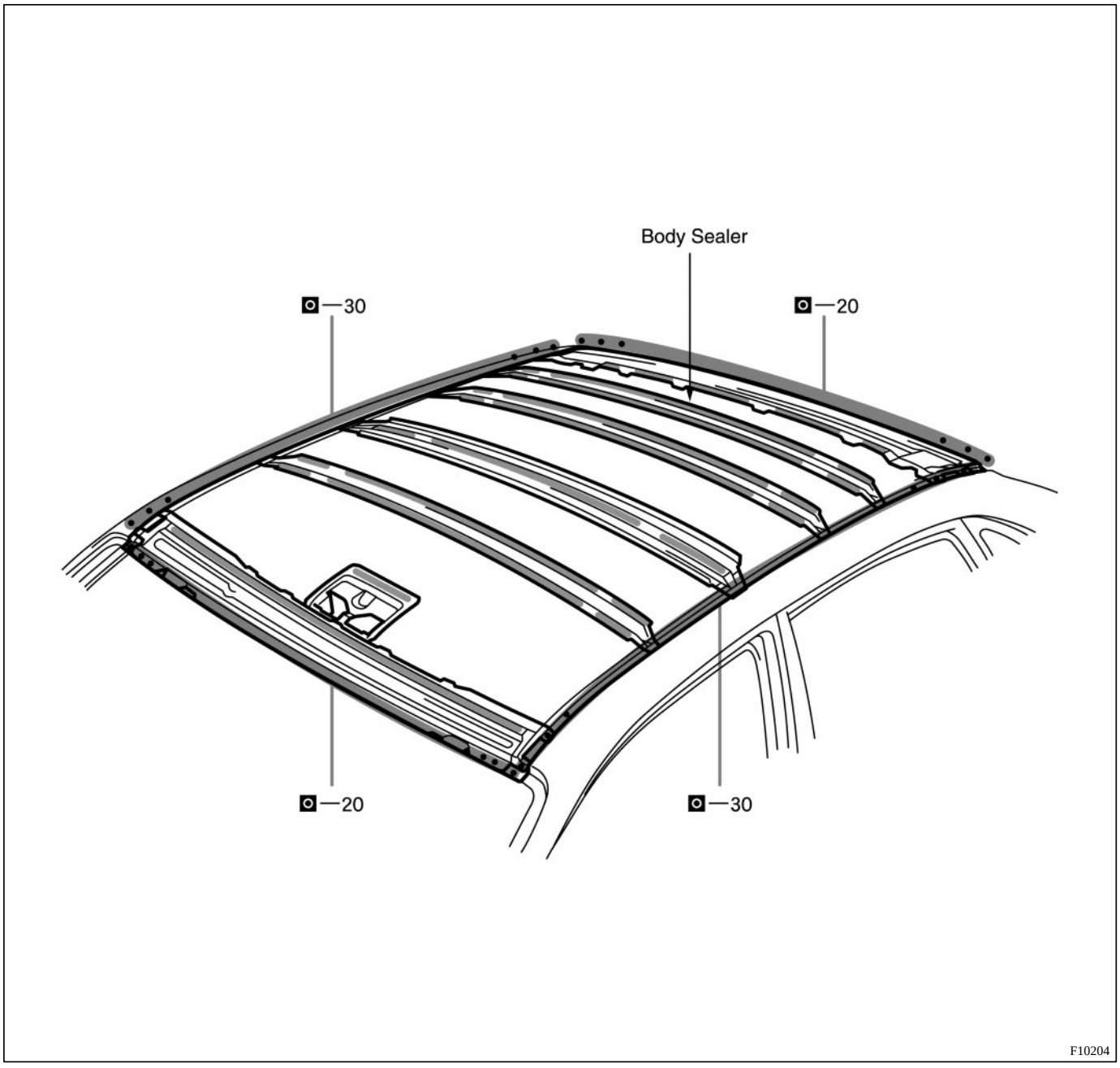

3. APPLYING SEALER TO THE INSIDE OF THE VEHICLE (See page PC-1)

4. APPLYING SEALER TO THE REAR LUGGAGE COMPARTMENT (See page PC-1)

5. CHARGING THE POLYURETHANE FOAM (See page PC-8)

6. APPLYING ANTI-RUST AGENT

(a) After applying the top coat layer, apply the anti-rust agent to the inside of the necked section structural weld spots.

ABBREVIATIONS USED IN THIS MANUAL

For convenience, the following abbreviations are used in this manual.

ABS	Antilock Brake System
A/C	Air Conditioner
assy	assembly
ECT	Electronic Controlled Transmission
ECU	Electronic Control Unit
e.g.	Exempli Gratia (for Example)
Ex.	Except
FWD	Front Wheel Drive Vehicles
4WD	Four Wheel Drive Vehicles
in.	inch
LH	Left-hand
LHD	Left-hand Drive
MIG	Metal Inert Gas
M/Y	Model Year
PPS	Progressive Power Steering
RH	Right-hand
RHD	Right-hand Drive
SRS	Supplemental Restraint System
SSM	Special Service Materials
w/	with
w/o	without

FOREWORD

This repair manual has been prepared to provide essential information on body panel repair methods (including cutting and welding operations, but excluding painting) for the TOYOTA AVALON.

Applicable models: MCX20 series

This manual consists of body repair methods, exploded diagrams and illustrations of the body components and other information relating to body panel replacement such as handling precautions, etc. However, it should be noted that the front fenders of the TOYOTA model is bolted on and require no welding.

When repairing, don't cut and join areas that are not shown in this manual. Only work on the specified contents to maintain body strength.

Body construction will sometimes differ depending on specifications and country of destination. Therefore, please keep in mind that the information contained herein is based on vehicles for general destinations.

For the repair procedures and specifications other than collision-damaged body components of the TOYOTA AVALON refer to the repair manuals.

If you require the above manuals, please contact your TOYOTA Dealer.

All information contained in this manual is the most up-to-date at the time of publication. However, specifications and procedures are subject to change without prior notice.

TOYOTA MOTOR CORPORATION

GENERAL REPAIR INSTRUCTIONS

1. WORK PRECAUTIONS

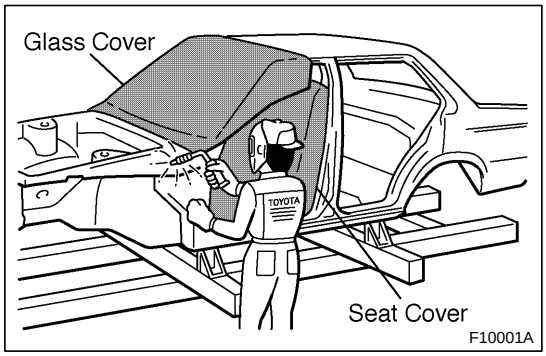

(a) VEHICLE PROTECTION

(1) When welding, protect the painted surfaces, windows, seats and carpet with heat resistant, fire-proof covers.

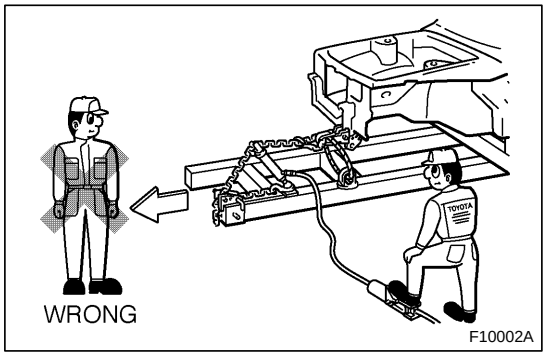

(b) SAFETY

(1) Never stand in direct line with the chain when using a puller on the body or frame, and be sure to attach a safety cable.

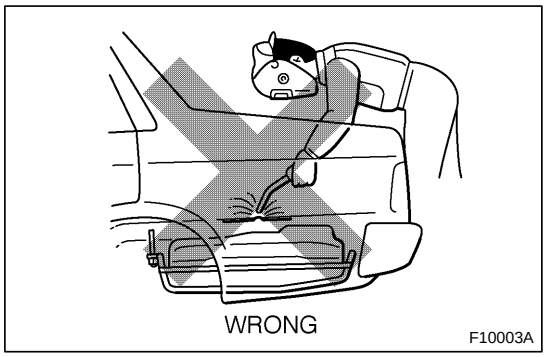

(2) Before performing repair work, check for fuel leaks. If a leak is found, be sure to close the opening totally.

(3) If it is necessary to use a frame in the area of the fuel tank, first remove the tank and plug the fuel line.

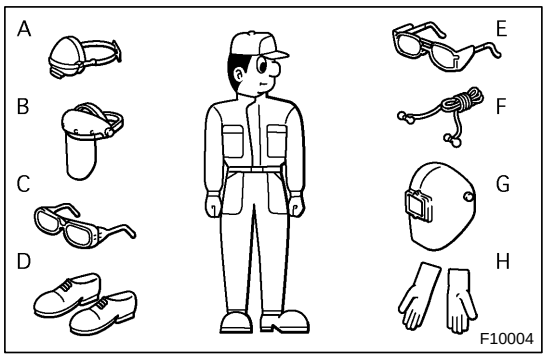

(c) SAFETY WORK CLOTHES

(1) In addition to the usual mechanic's wear, cap and safety shoes, the appropriate gloves, head protector, glasses, ear plugs, face protector, dust-prevention mask, etc. should be worn as the situation demands.

Code	Name
A	Dust-Prevention Mask
B	Face Protector
C	Eye Protector
D	Safety Shoes
E	Welder's Glasses
F	Ear Plugs
G	Head Protector
H	Welder's Gloves

2. HANDLING PRECAUTIONS OF PLASTIC BODY PARTS

(1) The repair procedure for plastic body parts must conform with the type of plastic material.

(2) Plastic body parts are identified by the codes in the following chart.

(3) When repairing metal body parts adjoining plastic body parts (by brazing, frame cutting, welding, painting etc.), consideration must given to the property of the plastic.

Code	Material name	Heat* resistant temperature limit °C (°F)	Resistance to alcohol or gasoline	Notes
AAS	Acrylonitrile Acrylic Styrene	80 (176)	Alcohol is harmless if applied only for short time in small amounts (e.g., quick wiping to remove grease).	Avoid gasoline and organic or aromatic solvents.
ABS	Acrylonitrile Butadiene Styrene	80 (176)	Alcohol is harmless if applied only for short time in small amounts (e.g., quick wiping to remove grease).	Avoid gasoline and organic or aromatic solvents.
AES	Acylonitrile Ethylene Styrene	80 (176)	Alcohol is harmless if applied only for short time in small amounts (e.g., quick wiping to remove grease).	Avoid gasoline and organic or aromatic solvents.
ASA	Acrylonitrile Styrene Acrylate	80 (176)	Alcohol is harmless if applied only for short time in small amounts (e.g., quick wiping to remove grease).	Avoid gasoline and organic or aromatic solvents.
CAB	Cellulose Acetate	80 (176)	Alcohol is harmless if applied only for short time in small amounts (e.g., quick wiping to remove grease).	Avoid gasoline and organic or aromatic solvents.
EPDM	Ethylene Propylene	100 (212)	Alcohol is harmless. Gasoline is harmless if applied only for short time in small amounts.	Most solvents are harmless but avoid dipping in gasoline, solvents, etc.
FRP	Fiber Reinforced Plastics	180 (356)	Alcohol and gasoline are harmless.	Avoid alkali.
EVA	Ethylene Acetate	70 (158)	Alcohol is harmless if applid only for short time in small amounts (e.g., quick wiping to remove grease).	Avoid gasoline and organic oraromatic solvents.
PA	Polyamide (Nylon)	80 (176)	Alcohol and gasoline are harmless.	Avoid battery acid.
PBT	Polybutylene Terephthalate	160 (320)	Alcohol and gasoline are harmless.	Most solvents are harmless.
PC	Polycarbonate	120 (248)	Alcohol is harmless.	Avoid gasoline brake fluid, wax, wax removers and organic solvents. Avoid alkali.

*Temperatures higher than those listed here may result in material deformation during repair.

Code	Material name	Heat* resistant temperature limit °C (°F)	Resistance to alcohol or gasoline	Notes
PE	Polyethylene	80 (176)	Alcohol and gasoline are harmless.	Most solvents are harmless.
PET	Polyethylene Terephthalate	75 (167)	Alcohol and gasoline are harmless.	Avoid dipping in water.
PMMA	Polymethyl Methacrylate	80 (176)	Alcohol is harmless if applied only for short time in small amounts.	Avoid dipping or immersing in alcohol, gasoline, solvents, etc.
POM	Polyoxymethylene (Polyacetal)	100 (212)	Alcohol and gasoline are harmless.	Most solvents are harmless.
PP	Polypropylene	80 (176)	Alcohol and gasoline are harmless.	Most solvents are harmless.
PPO	Modified Polyphenylene Oxide	100 (212)	Alcohol is harmless.	Gasoline is harmless if applied only for quick wiping to remove grease.
PS	Polystyrene	60 (140)	Alcohol and gasoline are harmless if applied only for short time in small amounts.	Avoid dipping or immersing in alcohol, gasoline, solvents, etc.
PUR	Polyurethane	80 (176)	Alcohol is harmless if applied only for very short time in small amounts (e.g., quick wiping to remove grease).	Avoid dipping or immersing in alcohol, gasoline, solvents, etc.
PVC	Polyvinylchloride (Vinyl)	80 (176)	Alcohol and gasoline are harmless if applied only for short time in small amounts (e.g., quick wiping to remove grease).	Avoid dipping or immersing in alcohol, gasoline, solvents, etc.
SAN	Styrene Acrylonitrile	80 (176)	Alcohol is harmless if applied only for short time in small amounts (e.g., quick wiping to remove grease).	Avoid dipping or immersing in alcohol, gasoline, solvents etc.
TPO	Thermoplastic Olefine	80 (176)	Alcohol is harmless. Gasoline is harmless if applied only for short time in small amounts.	Most solvents are harmless but avoid dipping in gasoline, solvents, etc.
TPU	Thermoplastic Polyurethane	80 (176)	Alcohol is harmless if applied only for short time in small amounts (e.g., quick wiping to remove grease).	Avoid dipping or immersing in alcohol, gasoline, solvents, etc.
TSOP	TOYOTA Super Olefine Polymer	80 (176)	Alcohol and gasoline are harmless.	Most solvents are harmless.
UP	Unsaturated Polyester	110 (233)	Alcohol and gasoline are harmless.	Avoid alkali.

*Temperatures higher than those listed here may result in material deformation during repair.

3. LOCATION OF PLASTIC BODY PARTS

Parts Name	Code
Radiator Grille	ABS
Front Bumper Cover	TSOP
Headlight	PC/PP/UP
Fog Light	PP/PC
Front Bumper Hole Cover	ABS
Outside Moulding	PVC
Body Rocker Moulding Panel	PP/TSOP
Outer Rear View Mirror	ABS
Outside Handle	PC
Back Door Outside Garnish	ABS
License Plate Light	PC
Back Light	ASA/PMMA
Rear Conbination Light	PMMA/AAS
Rear Bumper Cover	TSOP

HINT:
- Resin material differs with model.

/ Made up of 2 or more kinds of materials.

HANDLING PRECAUTIONS ON RELATED COMPONENTS

1. BRAKE SYSTEM

The brake system is one of the most important safety components. Always follow the directions and notes given in section BR of the repair manual for the relevant model year when handling brake system parts.

NOTICE: When repairing the brake master cylinder or TRAC system, bleed the air out of the TRAC system.

2. DRIVE TRAIN AND CHASSIS

The drive train and chassis are components that can have great effects on the running performance and vibration resistance of the vehicle. After installing components in the sections listed in the table below, perform alignments to ensure correct mounting angles and dimensions. Particularly accurate repair of the body must also be done to ensure correct alignment.

HINT: Correct procedures and special tools are required for alignment. Always follow the directions given in the repair manual for the relevant model during alignment and section DI of this manual.

Component to be aligned	Section of repair manual for relevant model
Front Wheels	Suspension and Axle (SA) section
Rear Wheels	Suspension and Axle (SA) section

3. COMPONENTS ADJACENT TO THE BODY PANELS

Various types of component parts are mounted directly on or adjacently to the body panels. Strictly observe the following precautions to prevent damaging these components and the body panels during handling.

- Before repairing the body panels, remove their components or apply protective covers over the components.
- Before prying components off using a screwdriver or a scraper, etc., attach protective tape to the tool tip or blade to prevent damaging the components and the body paint.
- Before removing components from the outer surface of the body, attach protective tape to the body to ensure no damage to painted areas.

  HINT: Apply touch-up paint to any damaged paint surfaces.
- Before drilling or cutting sections, make sure that there are no wires, etc. on the reverse side.

4. ECU (ELECTRONIC CONTROL UNIT)

Many ECUs are mounted in this vehicle.
Take the following precautions during body repair to prevent damage to the ECUs.

- Before starting electric welding operations, disconnect the negative (-) terminal cable from the battery. When the negative (-) terminal cable is disconnected from the battery, memory of the clock and audio systems will be cancelled. So before starting work, make a record of the contents memorized by each memory system. Then when work is finished, reset the clock and audio systems as before.
  When the vehicle has tilt and telescopic steering, power seat and outside rear view mirror, which are all equipped with memory function, it is not possible to make a record of the memory contents.
  So when the operation is finished, it will be necessary to explain this fact to the customer, and request the customer to adjust the features and reset the memory.
- Do not expose the ECUs to ambient temperatures above 80°C (176°F).

  NOTICE: If it is possible the ambient temperature may reach 80°C (176°F) or more, remove the ECUs from the vehicle before starting work.
- Be careful not to drop the ECUs and not to apply physical shocks to them.

HOW TO USE THIS MANUAL

1. BODY PANEL REPLACEMENT THIS MANUAL

BP–34

BODY PANEL REPLACEMENT

Ⓐ **QUARTER PANEL (CUT)**
REPLACEMENT

Ⓑ 1. REMOVE QUARTER PANEL
(a) Cut and join the part at the location as shown below.

Ⓒ

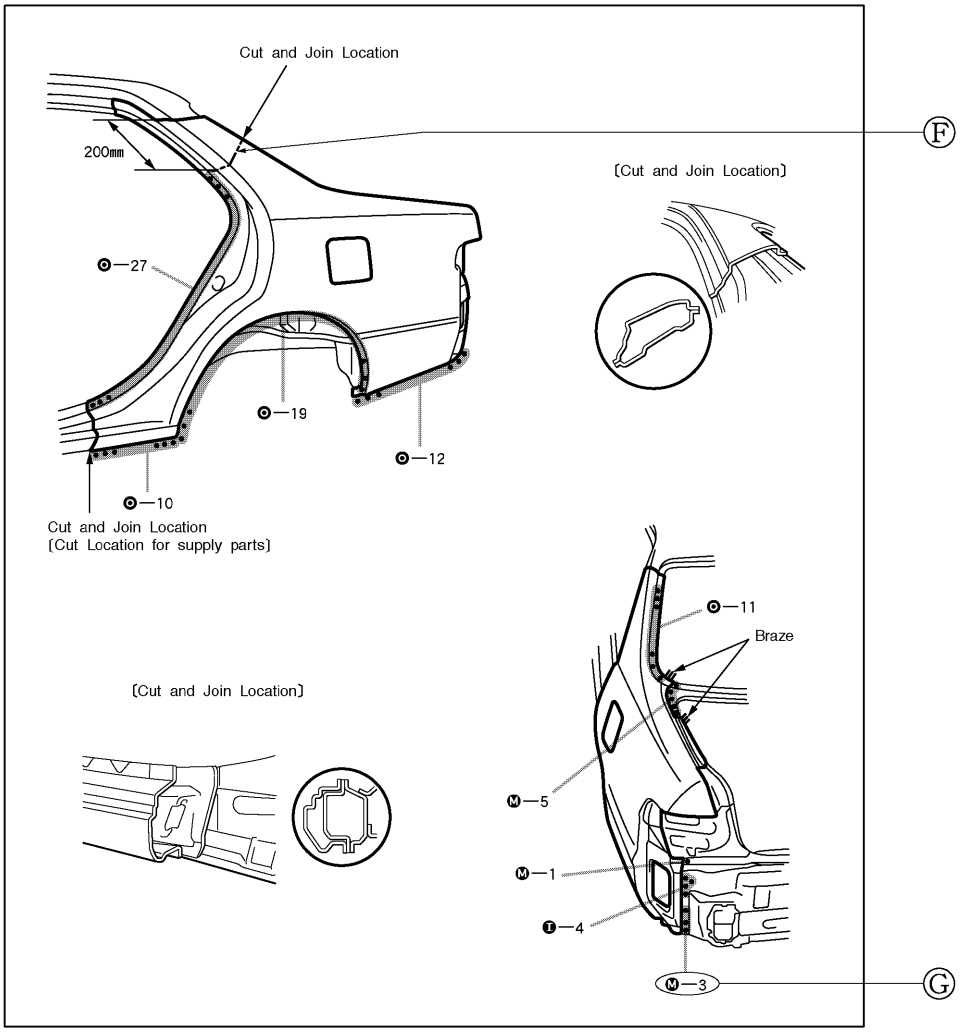

Ⓐ : **REPLACEMENT PARTS**
QUARTER PANEL (CUT)

- Replacement method
  - (ASSY) .... Assembly replacement
  - (CUT) ..... Major cutting (less than 1/2 of parts used)
  - (CUT-H) ... Half cutting (about 1/2 parts used)
  - (CUT-P) ... Partial cutting (most of parts used)
- Replacement Parts

Ⓑ : **REMOVAL DIAGRAM**
Describes in detail removal of the damaged parts involving repair by cutting.

Ⓒ : **REMOVAL GUIDE**
Provides additional information to more efficiently help you perform the removal.

F10113

BODY PANEL REPLACEMENT BP-35

2. INSTALL QUARTER PANEL

HINT:

Inspect the fitting of the rear door , luggage compartment door and rear combination light, etc., before welding, since this affects the appearance of the finish,

(a) Before temporarily installing the new parts, apply body sealer to the wheel arch. Ⓓ

HINT :

- Apply body sealer about 5 mm (0.20 in) from the flange, avoiding any oozing.
- Apply sealer evenly, about 3 - 4 mm (0.12 - 0.16 in.) in diameter.
- For other sealing points, refer to section PC.

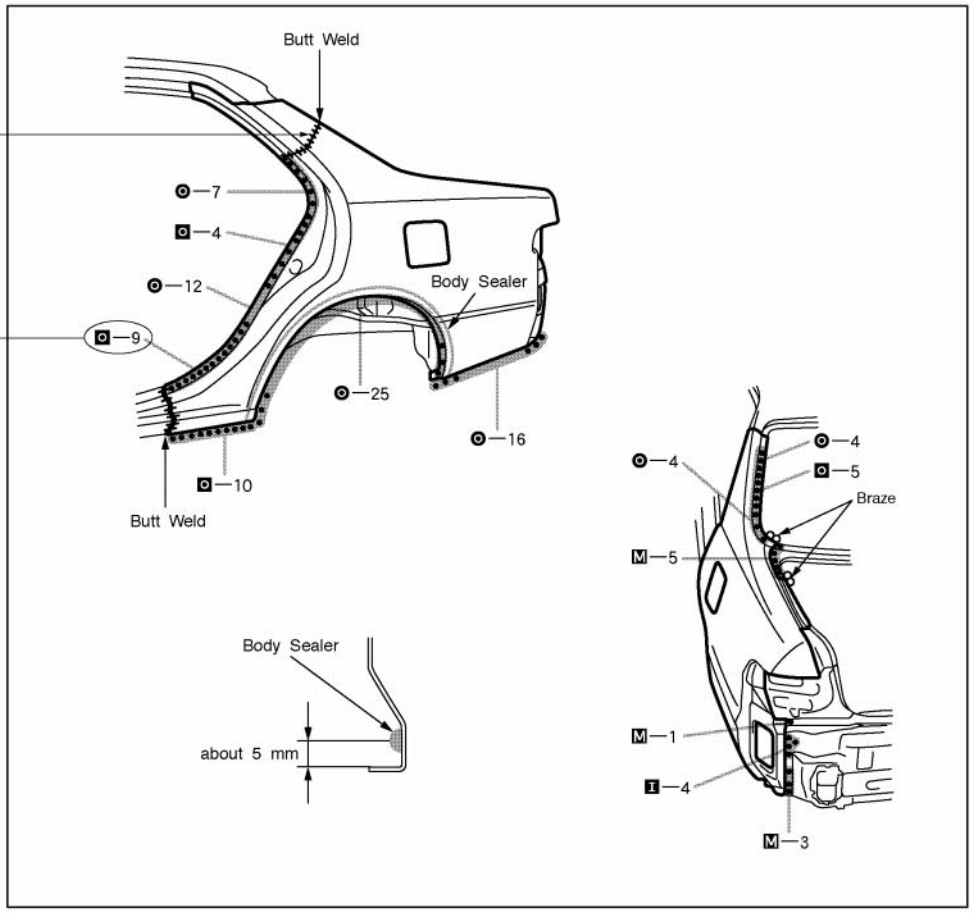

Ⓔ

3. MEASURING THE OPENING PORTION DIMENSIONS (See page BP-XX)
4. APPLYING SEALER TO THE INSIDE OF THE VEHICLE (See page PC-XX)
5. APPLYING SEALER TO THE REAR, LUGGAGE COMPARTMENT (See page PC-XX)
6. CHARGING THE POLYURETHANE FOAM (See page PC-XX)
7. APPLYING ANTI-RUST AGENT

(a) After applying the top coat layer, apply the anti-rust agent to the inside of the necked section structural weld spots. Ⓓ

Ⓓ : **INSTALLATION GUIDE**
Provides additional information to more efficiently help you perform the installation.

Ⓔ : **INSTALLATION DIAGRAM**
Describes in detail installation of the new parts involving repair by welding and / or cutting, but excluding painting

Ⓕ : **SYMBOLS**
See page SS-7.

Ⓖ : **ILLUSTRATION OF WELD POINTS**
Weld method and panel position symbols.
See page SS-8.

F10114A

2. SYMBOLS

The following symbols are used in the welding diagrams in section BP of this manual to indicate cutting areas and the types of weld required.

SYMBOLS	MEANING	ILLUSTRATION
	SAW CUT OR ROUGH CUT	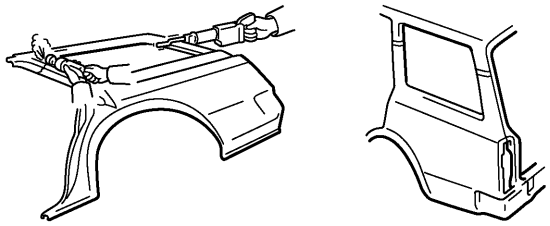
	REMOVE BRAZE	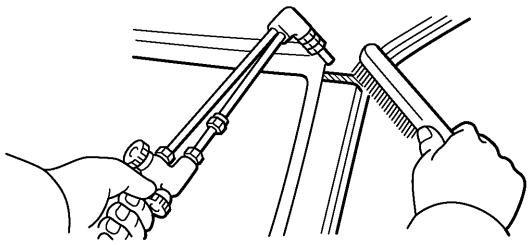
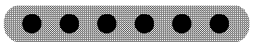	WELD POINTS	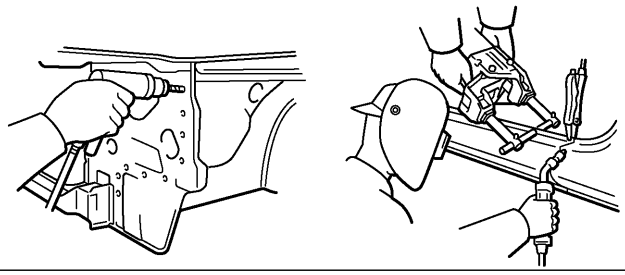
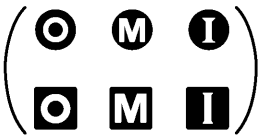	SPOT WELD OR MIG PLUG WELD (See Page SS-8)	
	CONTINUOUS MIG WELD (BUTT WELD OR TACK WELD)	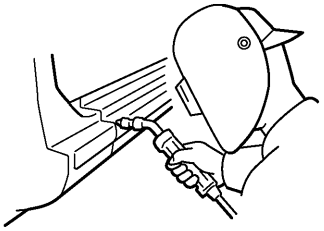
	BRAZE	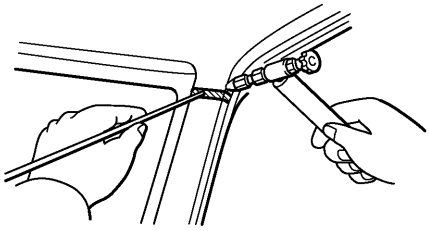
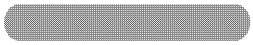	BODY SEALER	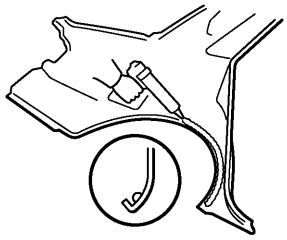

F10005A

3. ILLUSTRATION OF WELD POINT SYMBOLS

EXAMPLE:

REMOVAL

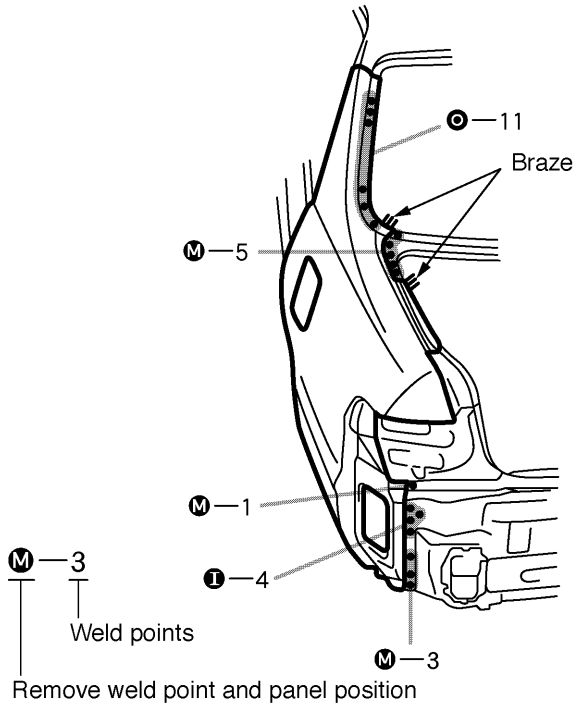

INSTALLATION

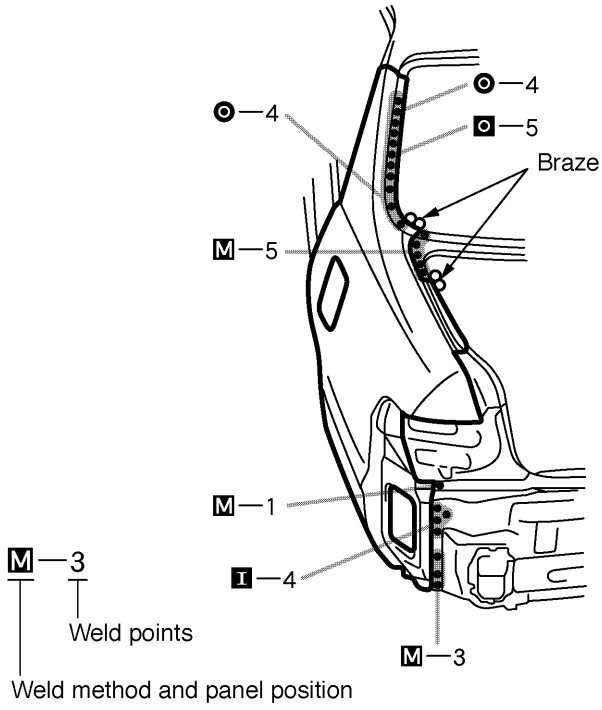

SYMBOL	MEANING	ILLUSTRATION
O M I	Remove Weld Points	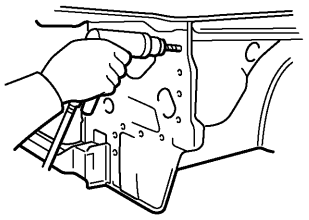
O	(Outside)	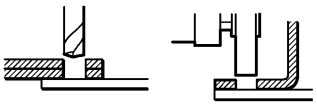
M	(Middle)	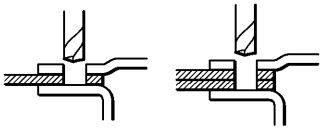
I	(Inside)	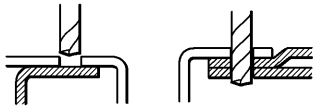

HINT: Panel position symbols are as seen from the working posture.

SYMBOL	MEANING	ILLUSTRATION
O M I	Spot Weld	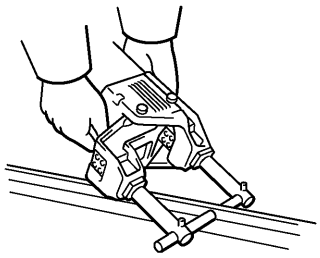
O M I	Mig Plug Weld	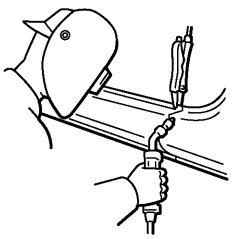
+	Spot MIG Weld	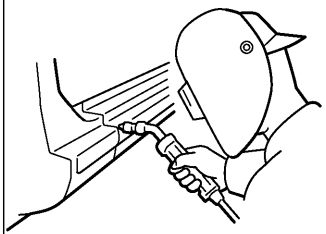

F10005A

PRECAUTIONS FOR REPAIRING BODY STRUCTURE PANELS

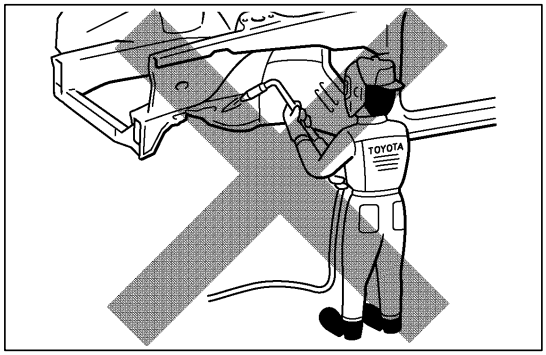

1. HEAT REPAIR FOR BODY STRUCTURE PANELS

Toyota prohibits the use of the heat repair method on body structure panels when repairing a vehicle damaged in a collision.

Panels that have high strength and rigidity, as well as a long life span for the automobile body are being sought after.

At Toyota, in order to fulfill these requirement, we use high tensile strength steel sheets and rust preventive steel sheets on the body.

High tensile steel sheets are made with alloy additives and a special heat treatment in order to improve the strength.

To prevent the occurrence of rust for a long period of time, the surface of the steel is coated with a zinc alloy.

If a body structure parts are heat repaired with an acetylene torch or other heating source, the crystalline organization of the steel sheet will change and the strength of the steel sheet will be reduced.

The ability of the body to resist rust is significantly lowered as well since the rust resistant zinc coating is destroyed by heat and the steel sheet surface is oxidized.

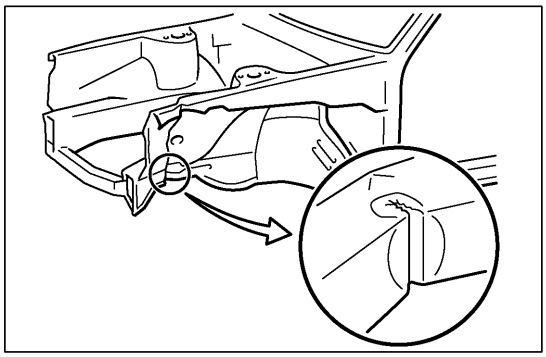

2. STRUCTURE PANEL KINKS

A sharp deformation angle on the panel that cannot be returned to its original shape by pulling or hammering is called a kink.

Since structure parts were designed to exhibit a 100% performance when they were in their original shape, if they are deformed in an accident, or if the deformed parts are repaired and reused, they become unable to exhibit the same performance as intended in the design.

It is necessary to replace the part where the kink has occurred.

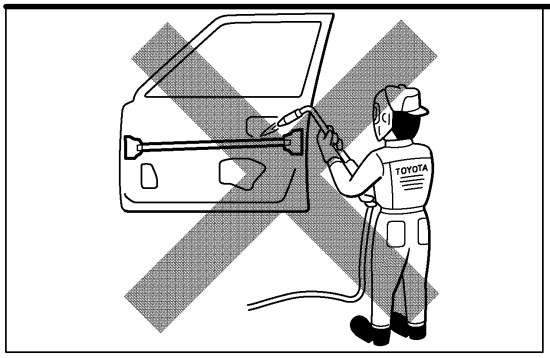

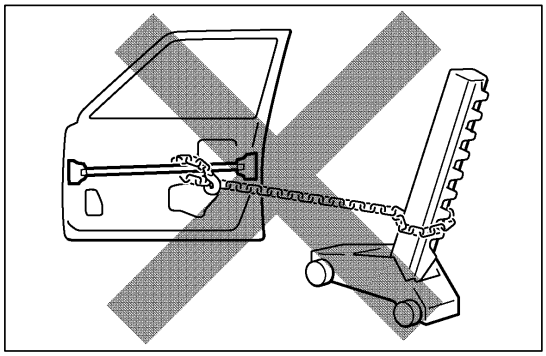

3. IMPACT BEAM REPAIR

The impact beam and bracket are necessary and important parts in maintaining a survival space for passengers in a side collision.

For impact beam, we use special high tensile strength steel. The high tensile strength steel maintains its special crystalline organization by heat treatment or alloy additives.

Since these parts were designed to exhibit a 100% performance when they were in their original shape, if they are deformed in an accident, or if the deformed parts are repaired and reused, they become unable to exhibit the same performance as intended in the design.

It is necessary to replace the door assembly when impact beam or bracket is damaged.

PROPER AND EFFICIENT WORK PROCEDURES

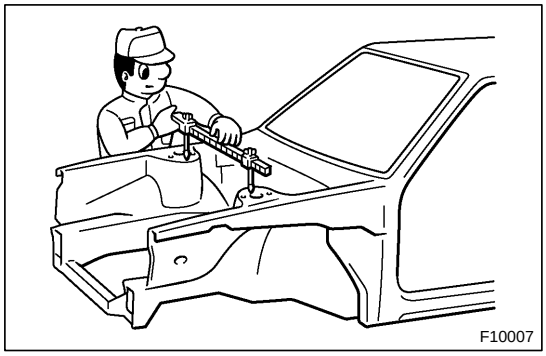
F10007

1. REMOVAL

(a) PRE-REMOVAL MEASURING

(1) Before removal or cutting operations, take measurements in accordance with the dimension diagram. Always use a puller to straighten a damaged body or frame.

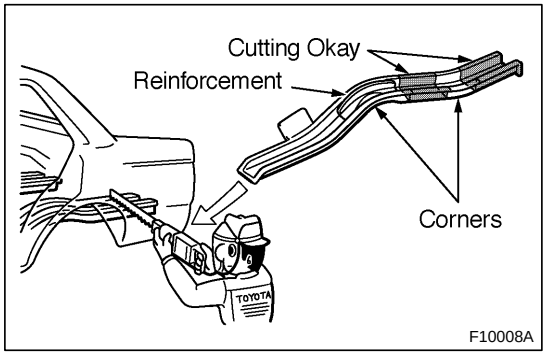

F10008A

(b) CUTTING AREA

(1) Always cut in a straight line and avoid reinforced area.

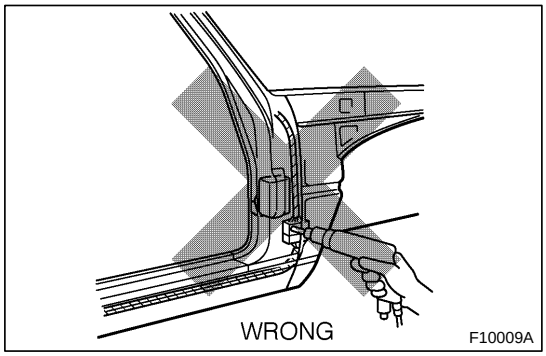

F10009A

(c) PRECAUTIONS FOR DRILLING OR CUTTING

(1) Check behind any area to be drilled or cut to insure that there are no hoses, wires, etc., that may be damaged.

HINT: See “Handling Precautions on Related Components” on page SS-14.

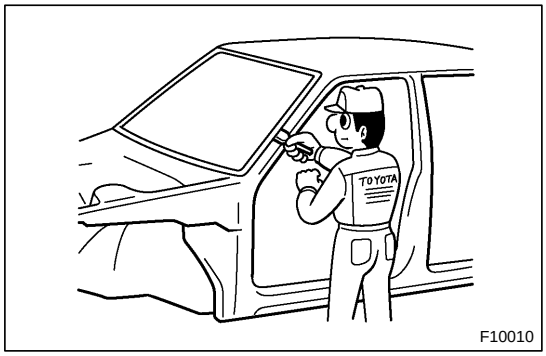

F10010

(d) REMOVAL OF ADJACENT COMPONENTS

(1) When removing adjacent components, apply protective tape to the surrounding body and your tools to prevent damage.

HINT: See “Handling Precautions on Related Components” on page SS-14.

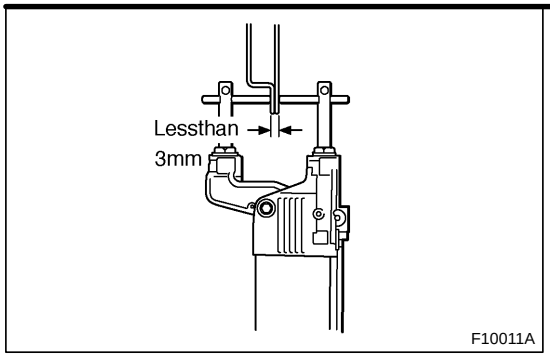

2. PREPARATION FOR INSTALLATION

(a) SPOT WELD POINTS

(1) When welding panels with a combined thickness of over 3 mm (0.12 in.), use a MIG (Metal Inert Gas) welder for plug welding.

HINT: Spot welding will not provide sufficient durability for panels over 3 mm (0.12 in.) thick.

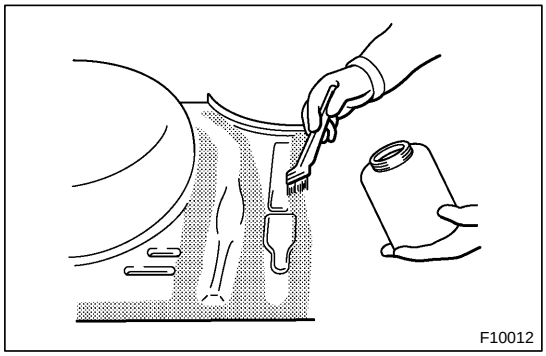

(b) APPLICATION OF WELD-THROUGH PRIMER (SPOT SEALER)

(1) Remove the paint from the portion of the new parts and body to be welded, and apply weld-through primer.

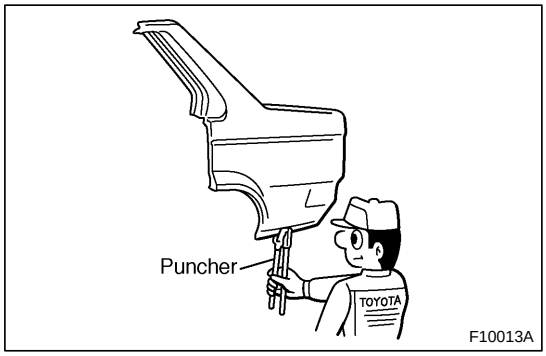

(c) MAKING HOLES FOR PLUG WELDING

(1) For areas where a spot welder cannot be used, use a puncher or drill to make holes for plug welding.

REFERENCE: mm (in.)

Thickness of welded portion	Size of plug hole
1.0 (0.04) under	5 (0.20) ø over
1.0 (0.04) - 1.5 (0.06)	6.4 (0.26) ø over
1.5 (0.06) over	8 (0.31) ø over

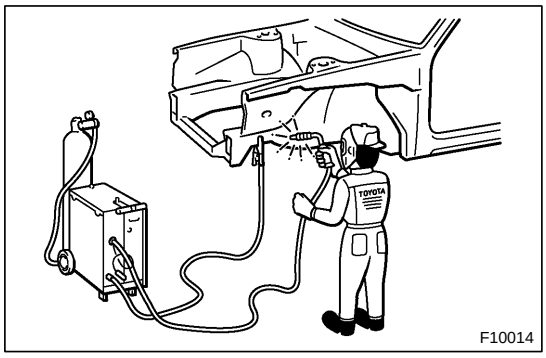

(d) SAFETY PRECAUTIONS FOR ELECTRICAL COMPONENTS

(1) When welding, there is a danger that electrical components will be damaged by the electrical current flowing through the body.

(2) Before starting work, disconnect the negative terminal of the battery and ground the welder near the welding location of the body.

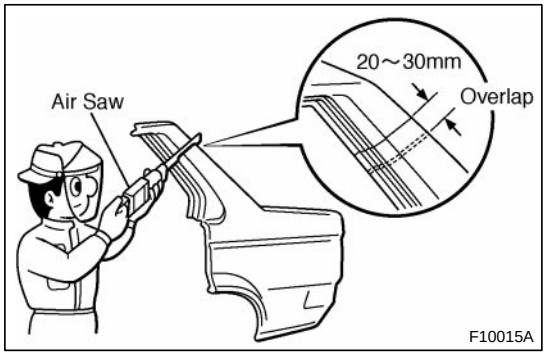

(e) ROUGH CUTTING OF JOINTS

(1) For joint areas, rough cut the new parts, leaving 20 - 30 mm (0.79 - 1.18 in.) overlap.

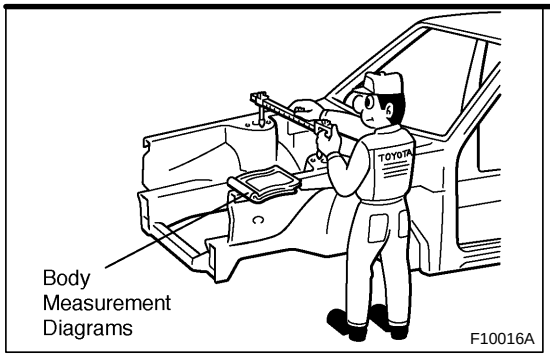

3. INSTALLATION

(a) PRE-WELDING MEASUREMENTS

(1) Always take measurements before installing underbody or engine components to insure correct assembly. After installation, confirm proper fit.

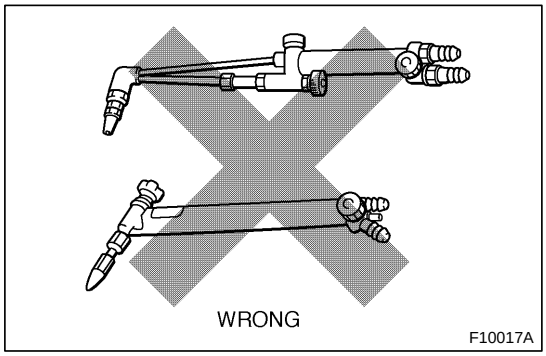

(b) WELDING PRECAUTIONS

(1) The number of welding spots should be as follows.

Spot weld: 1.3 X No. of manufacturer's spots.
Plug weld: More than No. of manufacturer's plugs.

(2) Plug welding should be done with a MIG (Metal Inert Gas) welder. Do not gas weld or braze panels at areas other than specified.

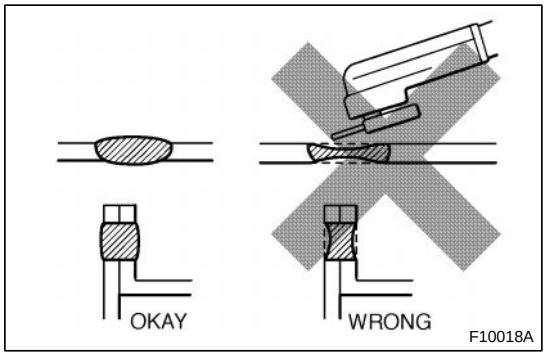

(c) POST-WELDING REFINISHING

(1) Always check the welded spots to insure they are secure.

(2) When smoothing out the weld spots with a disc grinder, be careful not to grind off too much as this would weaken the weld.

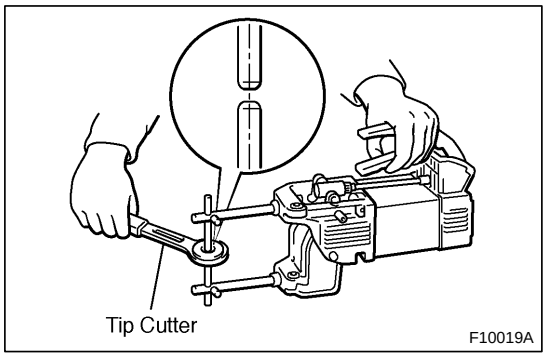

(d) SPOT WELD LOCATIONS

(1) Try to avoid welding over previous spots.

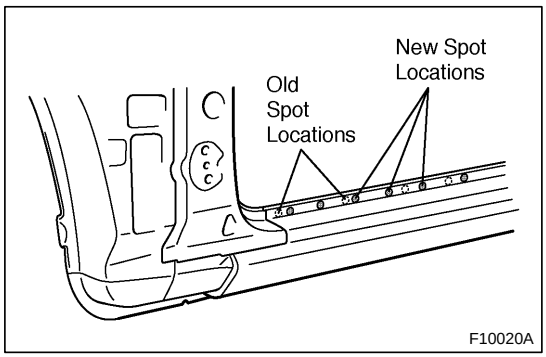

(e) SPOT WELDING PRECAUTIONS

(1) The shape of the welding tip point has an effect on the strength of the weld.

(2) Always insure that the seams and welding tip are free of paint.

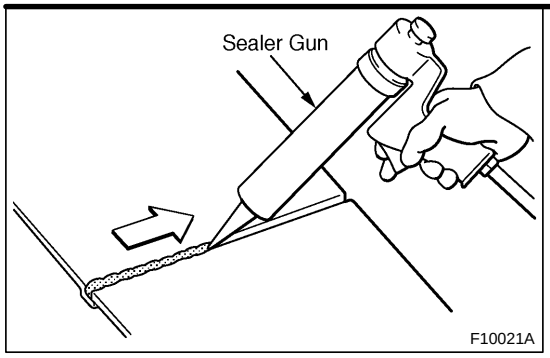

4. ANTI-RUST TREATMENT

(a) BODY SEALER APPLICATION

(1) For water-proofing and anti-corrosion measures, always apply the body sealer to the body panel seams and hems of the doors, hoods, etc.

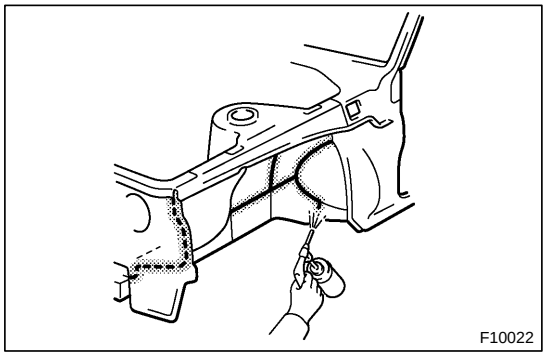

(b) UNDERCOAT APPLICATION

(1) To prevent corrosion and protect the body from damage by flying stones, always apply sufficient undercoat to the bottom surface of the under body and inside of the wheel housings.

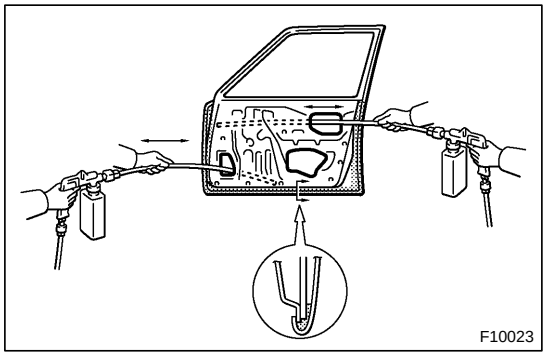

5. ANTI-RUST TREATMENT AFTER PAINTING PROCESS

(a) ANTI-RUST AGENT (WAX) APPLICATION

(2) To preserve impossible to paint areas from corrosion, always apply sufficient anti-rust agent (wax) to the inside of the hemming areas of the doors and hoods, and around the hinges, or the welded surfaces inside the boxed cross-section structure of the side member, body pillar, etc.

6. ANTI-RUST TREATMENT BY PAINTING

REFERANCE:

Painting prevents corrosion and protect the sheet metal from damage. In this section, anti-chipping paint only for anti-corrosion purpose is described.

(a) ANTI-CHIPPING PAINT

(1) To prevent corrosion and protect the body from damage by flying stones, etc., apply anti-chipping paint to the rocker panel, wheel arch areas, valance panel, etc.

HINT:
Depending on the model or the application area, there are cases where the application of anti-chipping paint is necessary before the second coat or after the top coat.

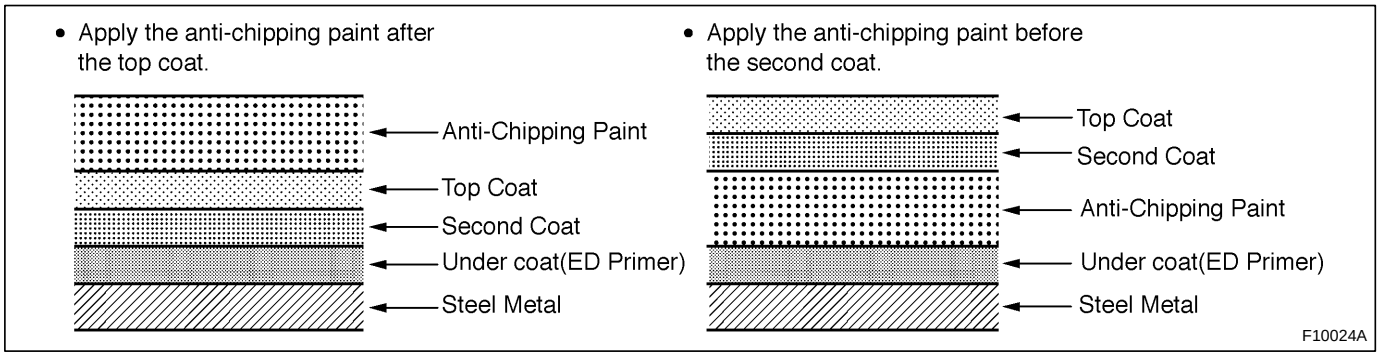

VIEWS OF THIS TEXT

Scope of the repair work explanation

- This text explains the welding panel replacement instructions from the vehicle's white body condition. We have abbreviated the explanations for the removal and reinstallation of the equipment parts up to the white body condition and for the installation, inspection, adjustment and final inspection of equipment parts after replacing the weld panel.

Section categories

- Each section has been divided as shown below.

Section Title	Contents	Examples
INTRODUCTION	Explanation of general body repair. Views of weld panel replacement instructions.	Cautionary items. Views of weld panel replacement instructions.
BODY PANEL REPLACEMENT	Body aligning measurements and instructions for replacing the weld panels from the white body condition, from which bolted parts have been removed, with individual supply parts.	Front side member replacement. Quarter panel replacement. Dimension diagrams.
PAINT • COATING	Scope and type of anti-rust treatment, etc. together with weld panel replacement.	Under coat. Body sealer.

Abbreviation of contents in this text.

- The following essential procedures have been abbreviated. When actually working, conduct this work properly.
  (1) Jack and lift operations.
  (2) Clean and wash removed parts, if necessary.
  (3) Visual inspection.

BODY PANEL UNDERCOATING AREAS

HINT:

1. First wipe off any dirt, grease or oil with a rag soaked in a grease, wax and silicone remover.
2. Cover the surrounding areas with masking paper to avoid coating unnecessary areas. If other areas are accidently coated, wipe off the coating immediately.
3. Apply the first coating of undercoat to all welded areas and panel joints, then apply a second coat over the entire area.
4. Do not coat parts which become hot, such as the tailpipe, or moving parts, such as the propeller shaft.
5. Besides the locations described below, apply undercoating to all weld points under the body to insure corrosion prevention.
6. Be sure to seal the edge of the flange of the member and bracket with undercoating.
7. If undercoat is damaged by peeling, cracks, etc., be sure to repair as necessary.
8. Before the undercoat apply sealer allowing rust prevention to be attaind.

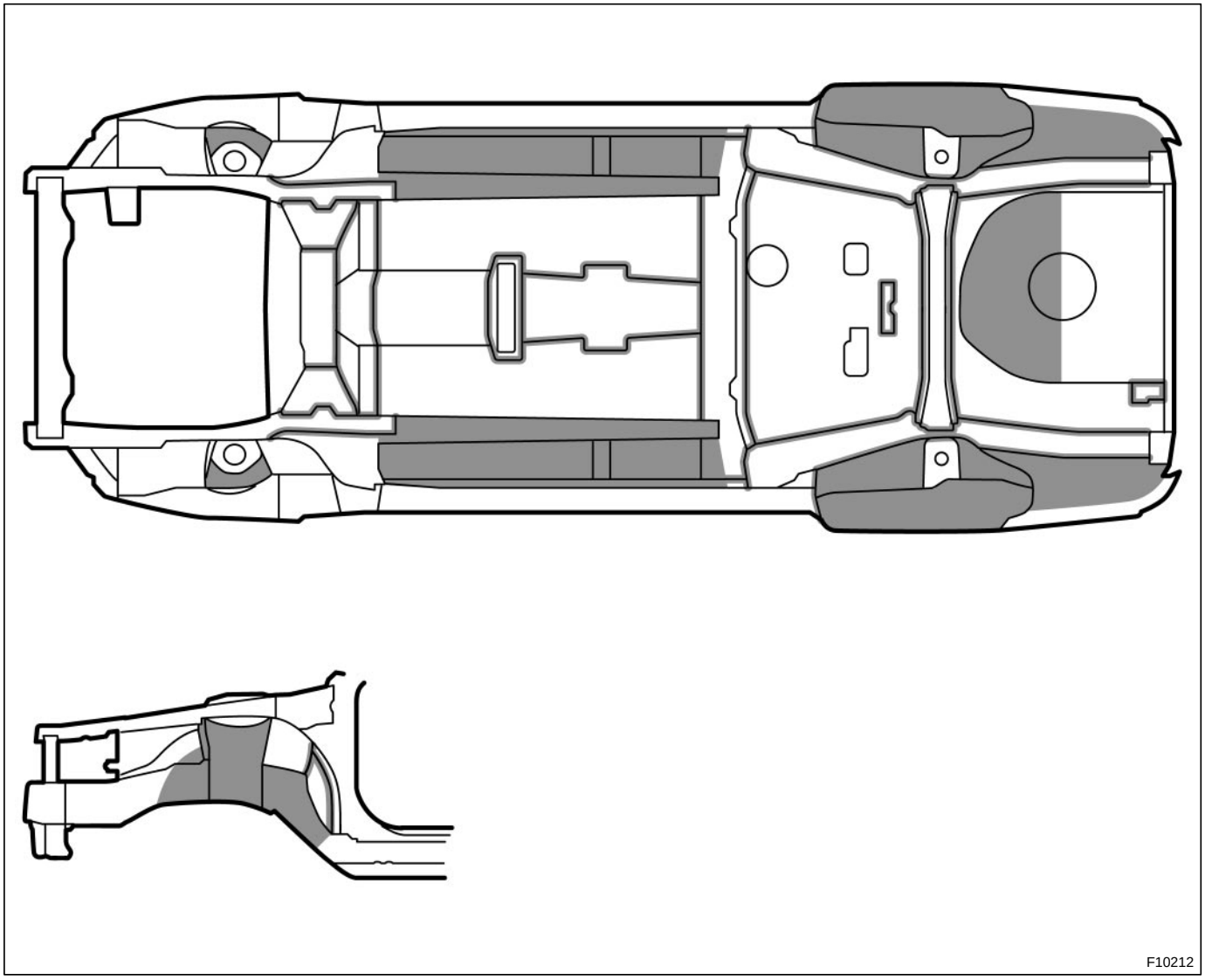

F10212

REFERENCE: Referring to the notes above, undercoating should be applied according to the specifications for your country.

BODY PANEL ANTI-RUST AGENT (WAX) APPLICATION AREAS

HINT:

1. Whenever adjusting the doors and hoods, apply anti-rust agent (wax) around the hinges.
2. Even if partially repairing a part, apply anti-rust agent (wax) over the entire application area of the part.
3. Wipe off the anti-rust agent immediately with a rag soaked in a grease, wax and silicone remover, if accidently applied to other areas.

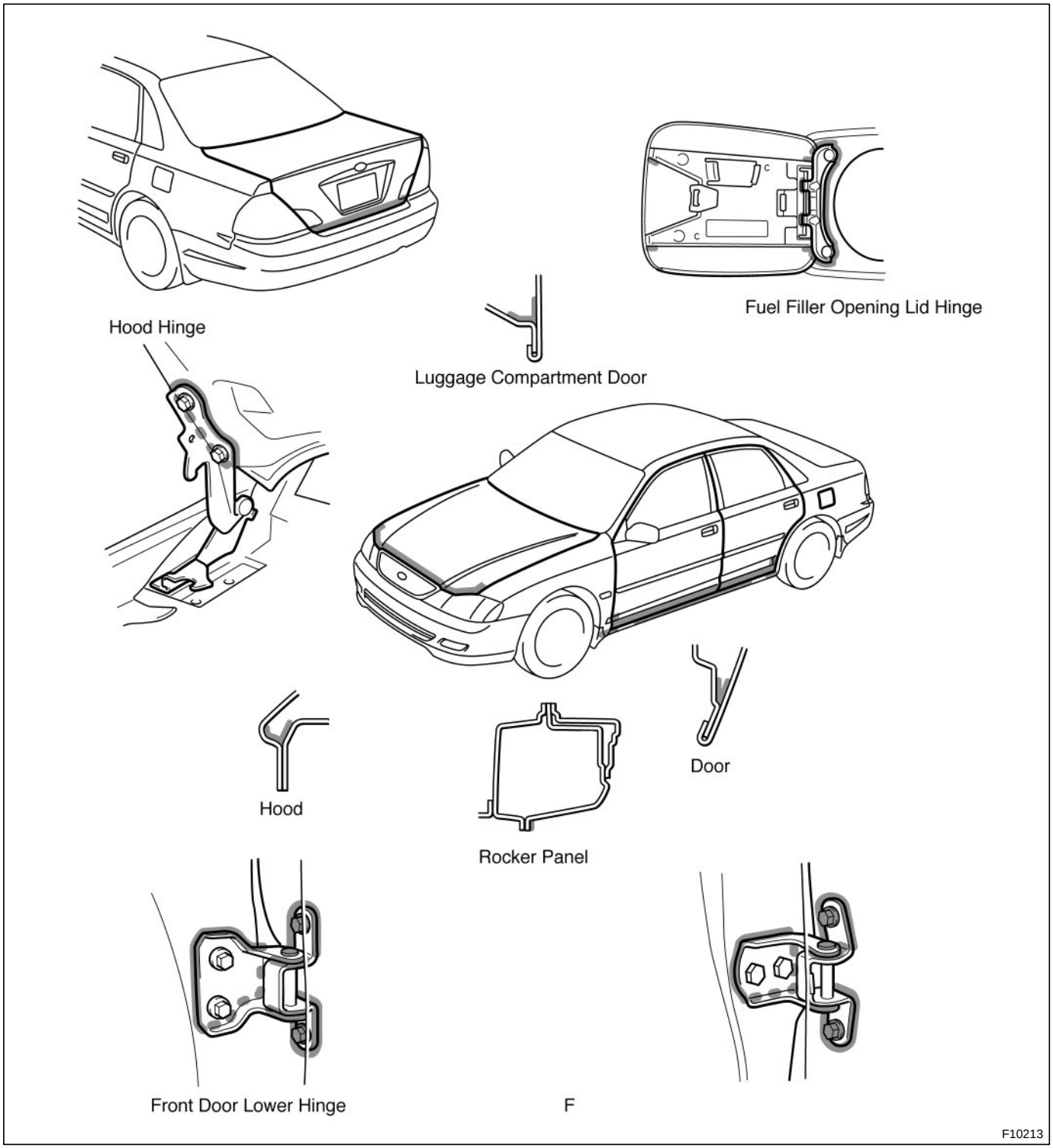

BODY PANEL ANTI-CHIPPING PAINT APPLICATION AREAS

HINT:

1. Anti-chipping paint should be applide to some areas before the second coat and to others after the top coat.
2. If other areas are accidentally coated, wipe of the paint immediately with a rag soaked in grease, wax and silicone remover.

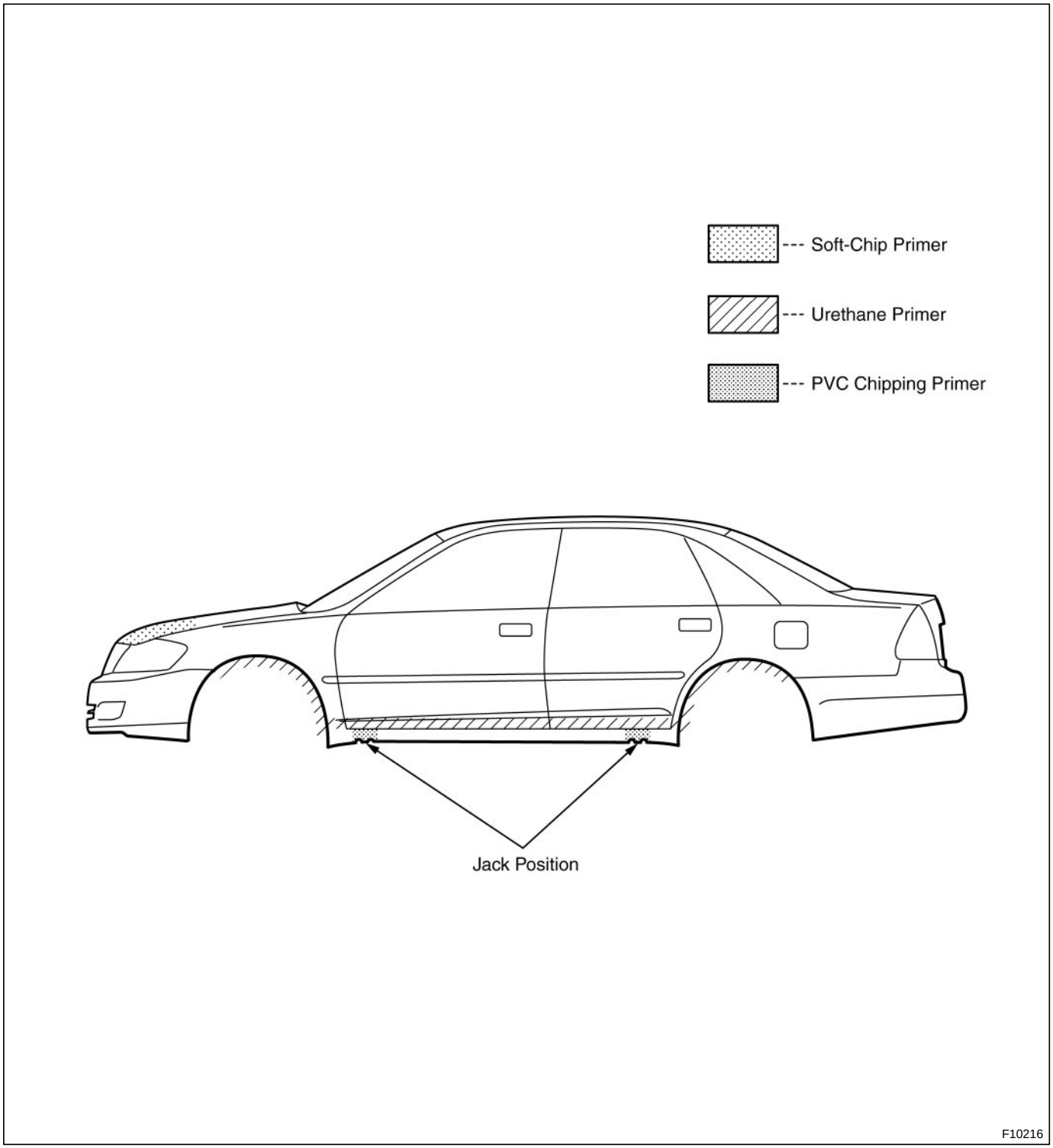

BODY PANEL SEALING AREAS

HINT:

1. Prior to applying body sealer, clean the area with a rag soaked in a grease, wax and silicone remover.
2. If weld-through primer was used, first wipe off any excess and coat with anti-corrosion primer before applying body sealer.
3. Wipe off excess body sealer with a rag soaked in a grease, wax and silicone remover.
4. If body sealer is damaged by peeling, cracks, etc., besure to repair as necessary.

1. ENGINE COMPARTMENT

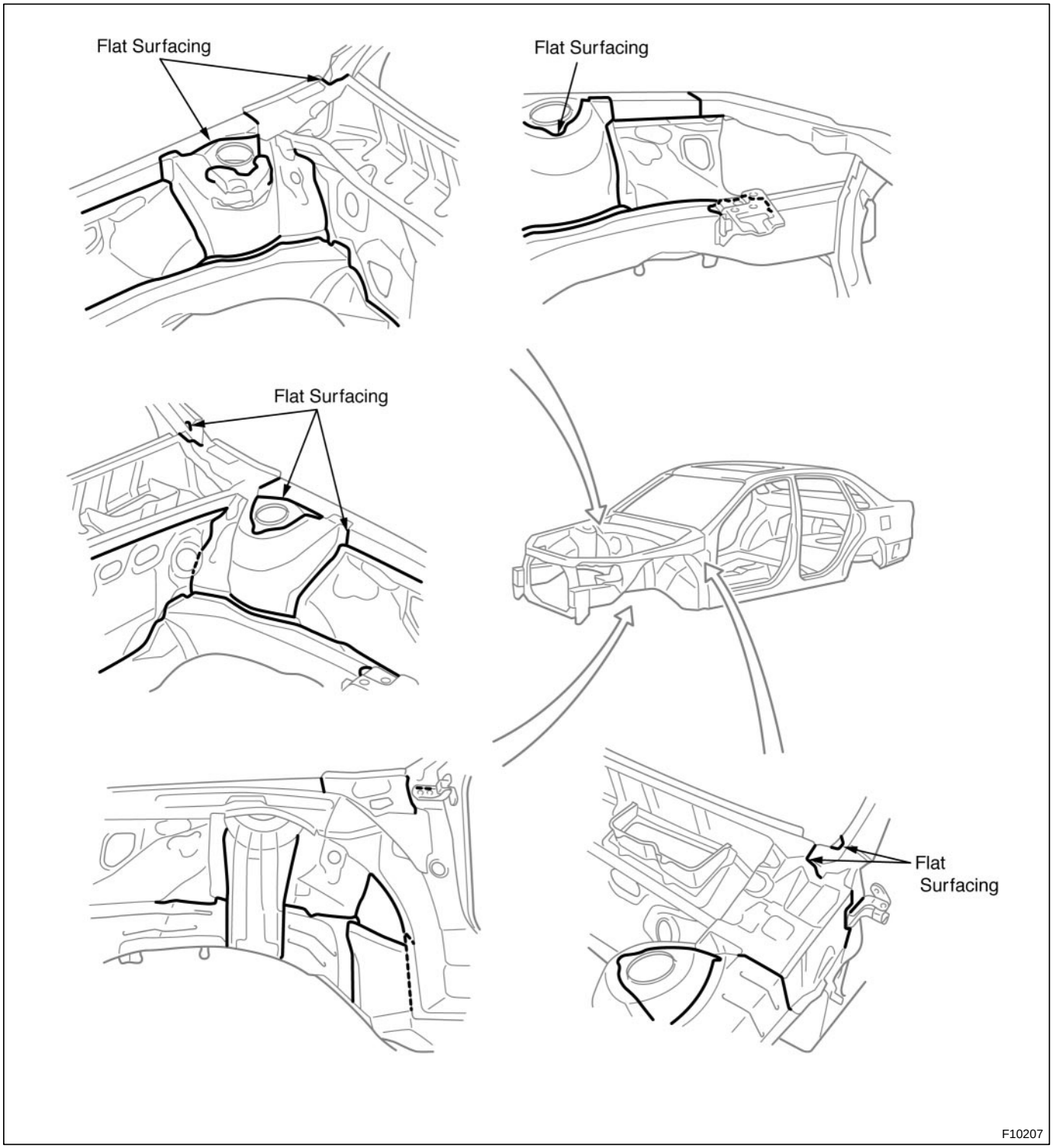

2. INSIDE

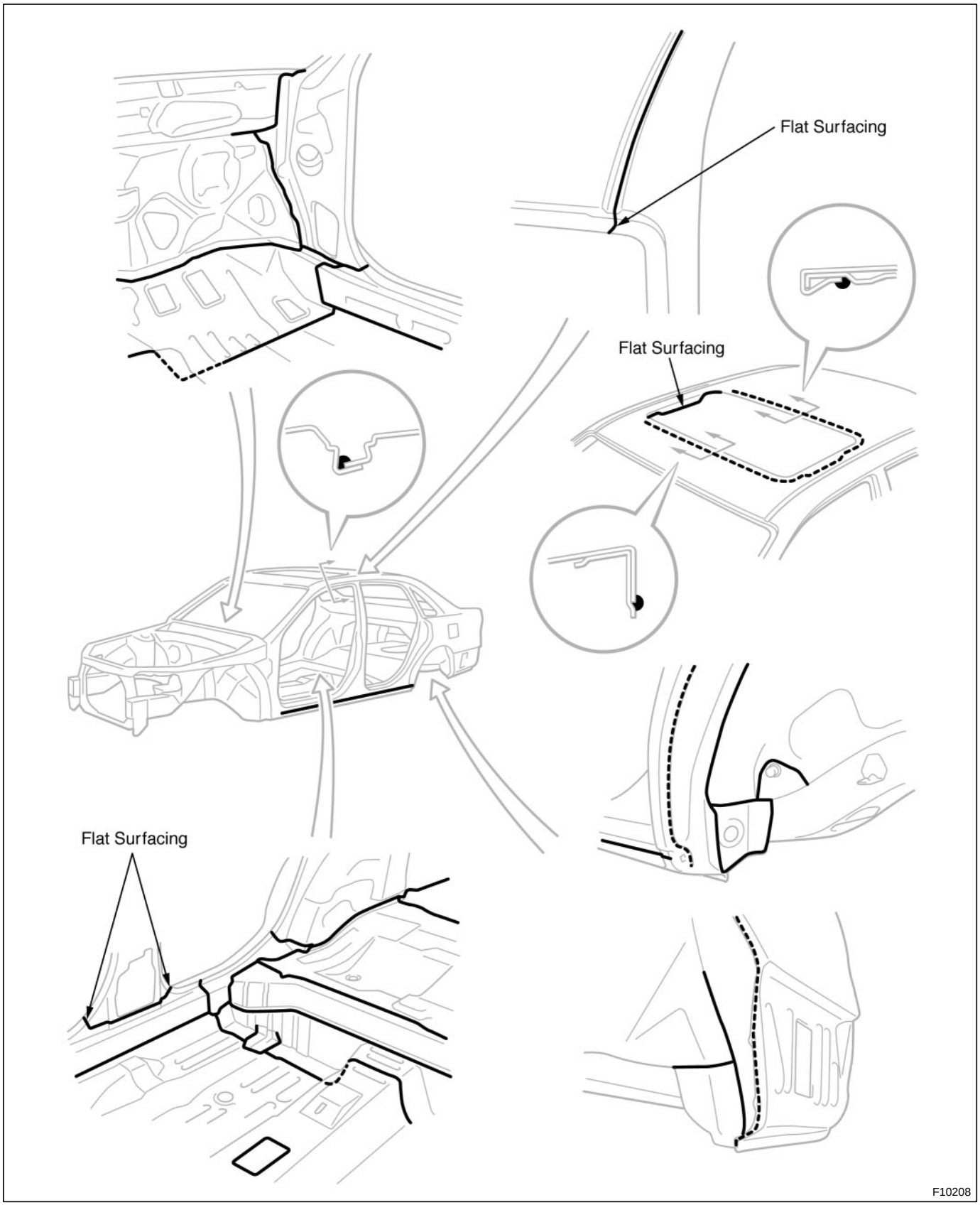

3. REAR LUGGAGE COMPARTMENT

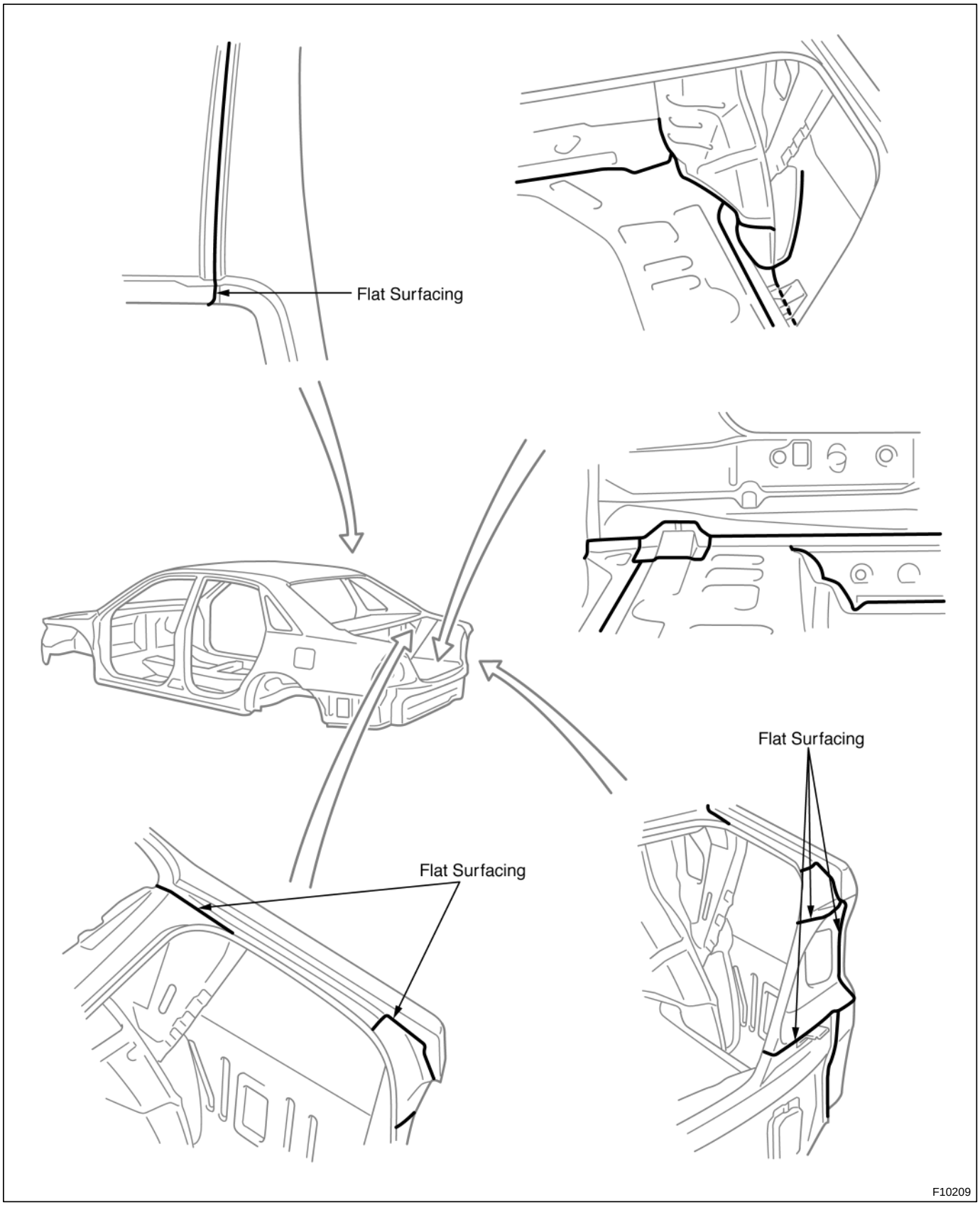

4. DOOR PARTS

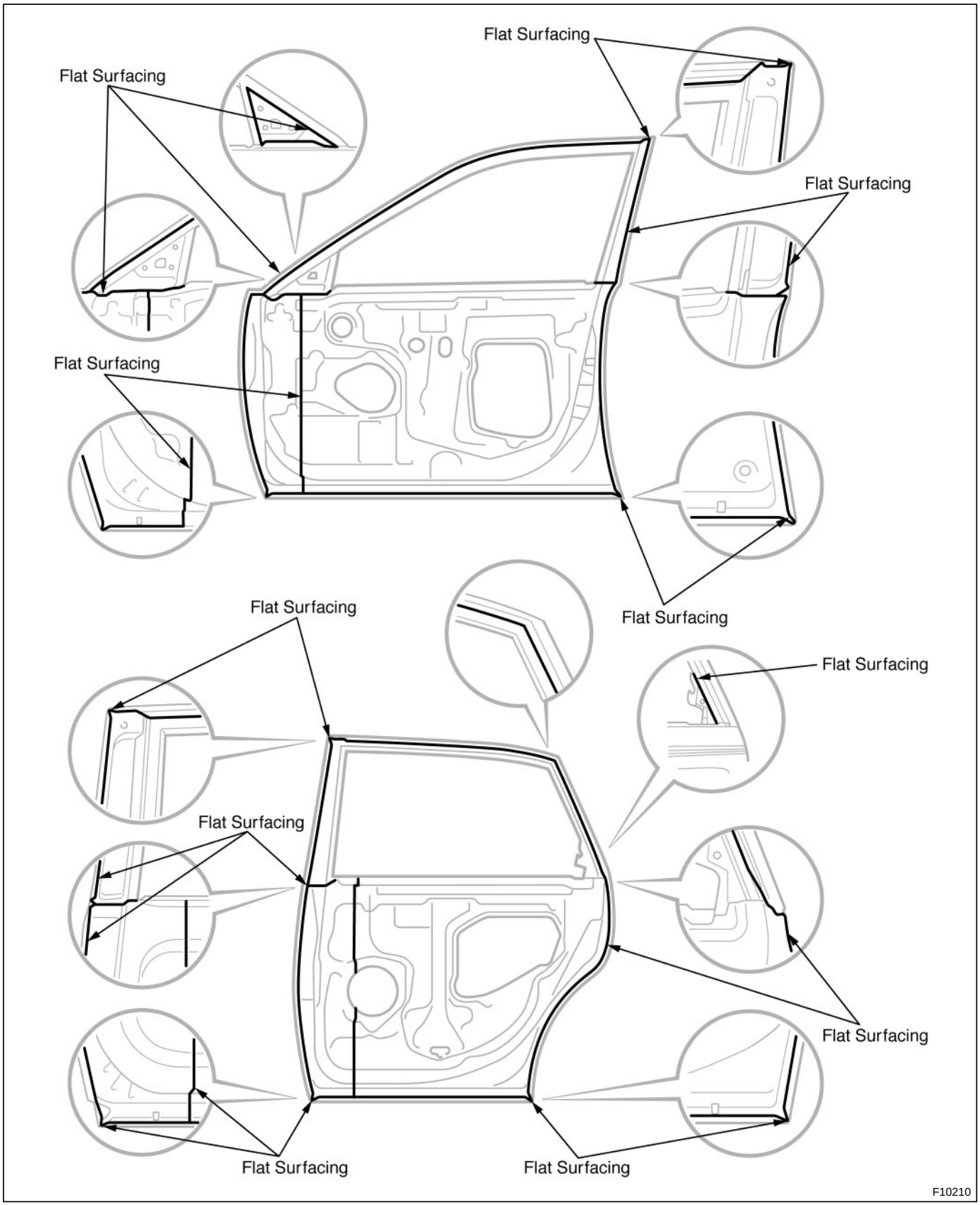
Flat Surfacing
Flat Surfacing
Flat Surfacing
Flat Surfacing
Flat Surfacing
Flat Surfacing
Flat Surfacing
Flat Surfacing
Flat Surfacing
Flat Surfacing
Flat Surfacing
F10210

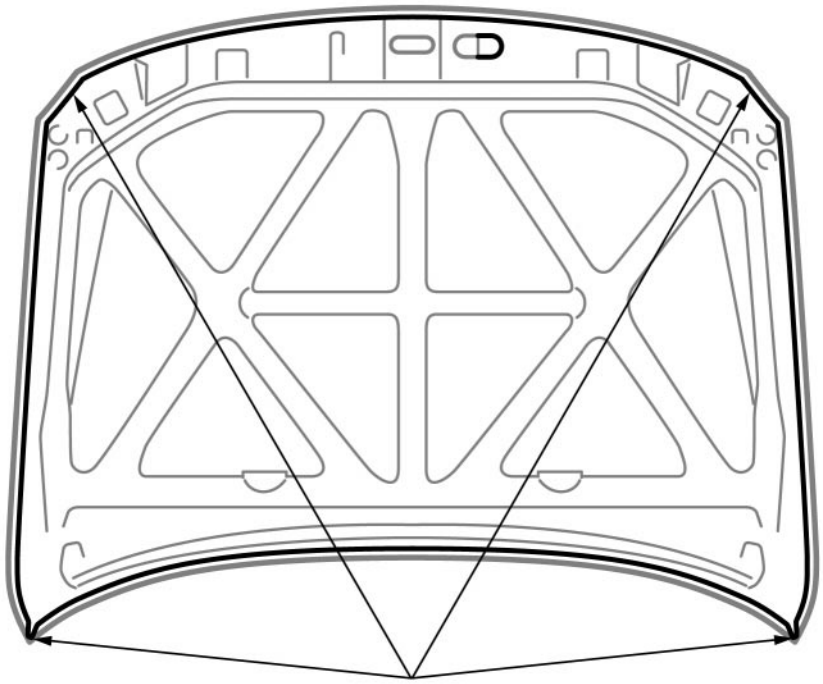

Flat Surfacing

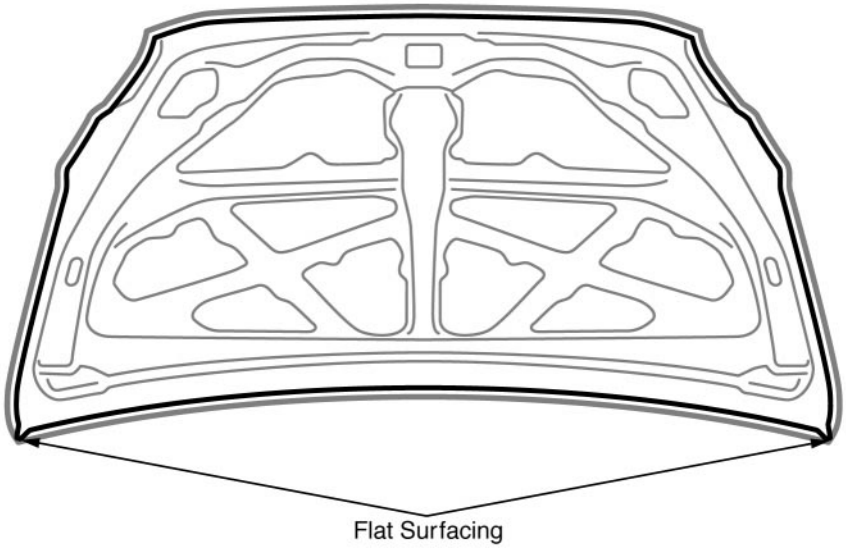

Flat Surfacing

F10211

FOAMED MATERIAL APPLICATION AREAS

The sections shown in the figure below are filled with foamed material to provide noise insullation. After repairing these sections or their peripheries, refill with foamed materials.

HINT:

1. Use the service holes located on the reverse side of the body panel to refill with foamed materials.
2. When handling foamed material, follow the directions of the material's manufacturer.

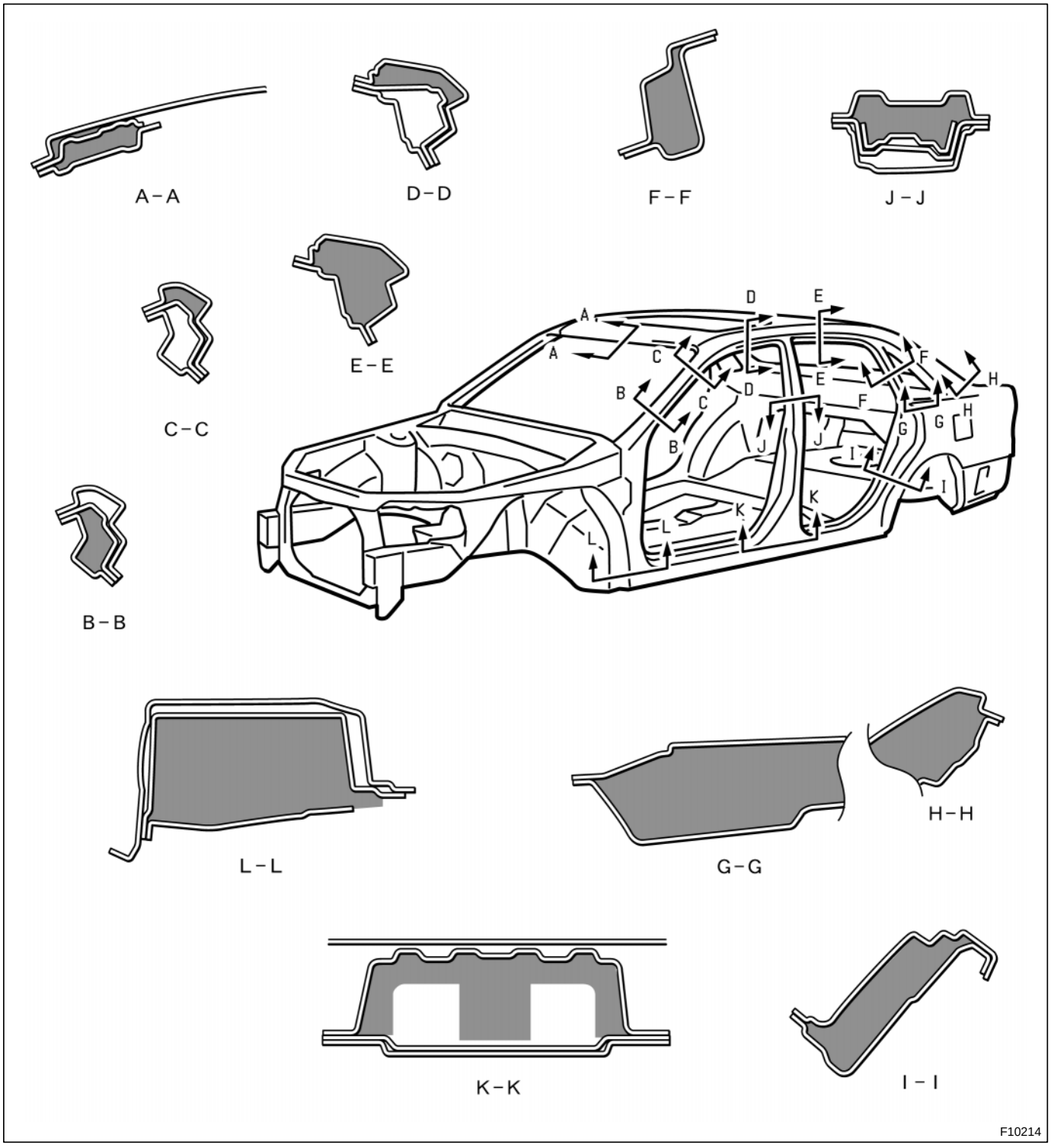

SILENCER SHEET INSTALLATION AREAS

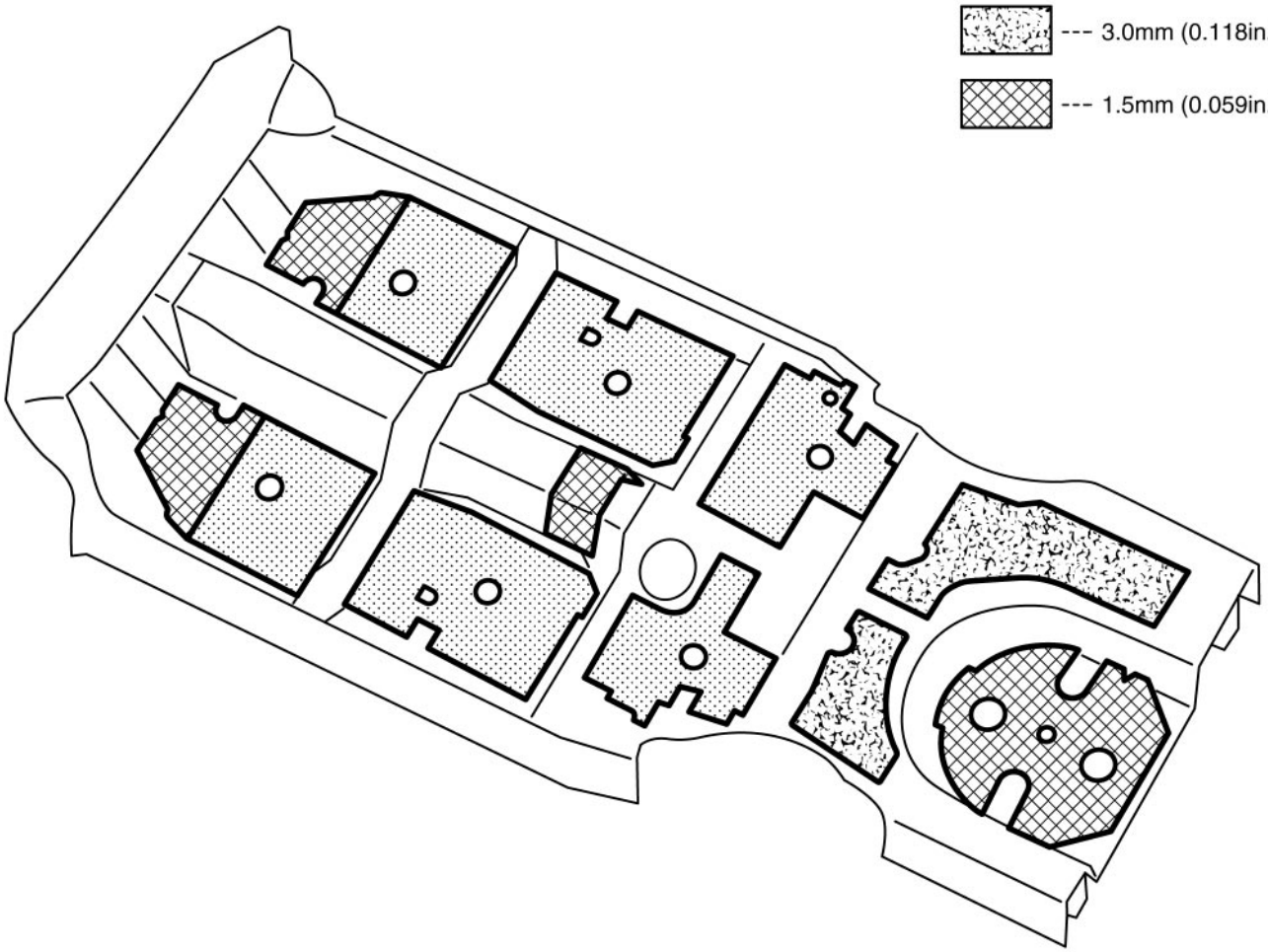

F10215